TOLL BRIDGE PROGRAM OVERSIGHT COMMITTEE

CALTRANS BAY AREA TOLL AUTHORITY CALIFORNIA TRANSPORTATION COMMISSION

TBPOC MEETING MINUTES
April 17, 2013, 9:00 AM – 1200 PM
Mission Bay Office, 325 Burma Road, Oakland, CA

Attendees: TBPOC Members: Steve Heminger (Chair), Andre Boutros, and Malcolm Dougherty
PMT Members: Tony Anziano, Andrew Fremier, and Stephen Maller
Participants: Rosme Aguilar, Ade Akinsanya, Bill Casey, Clive Endress. Rich Foley, John Goodwin, Andrew Gordon, Ted Hall, Peter Lee, Brian Maroney, Steve Matty, Dina Noel, Will Shuck, Trish Stoops, Ken Terpstra, and Mazen Wahbeh
Guests: ABF: Brian Petersen, Peter Vander Waart, Bob Kick; TY Lin/M&N: Marwan Nader; IBECA: Salim Brahimi; CMF: Conrad Christensen

Convened: 9:00 AM

Items	Action
E-2 BOLTS WORKSHOP 1. What fix should be installed? – BATA Commission Meetings: 4/28 & 5/8/13 2. Should 2010 bolts be replaced? BATA Commission Meetings: 4/28 & 5/8/13 3. What caused 2008 bolts to fail? BATA Commission Meeting: 4/28/13	
1. What fix should be installed? Currently there are 3 design alternatives underway (please refer to attached handouts provided in the meeting): A. Option A - Replace bolts, same as original design - Status: Design at 65%. This option would replace anchor rods and would require removal of shear keys; cut and removal of anchor rods in stages. Then re-installing shear keys, install rod extensions in stages, and grouting. Because of constructability	• TBPOC instructed the team to eliminate Option A, and continue developing Options BD1, BD2, and C to 65% design, continue providing design status update to TBPOC on a weekly basis. Design JV targeted that 65% design on Option BD and C to be completed by end of April. • Team advised TBPOC of implementation cost of either of

(Continued)

Items	Action
and damage to shear keys risk issues, Team suggested to eliminate this option B. Option BD - Steel Collars, new design implementation of adding metal frame grillage around housing to hold it down- Status: Design at 45%. Does not require removal of shear keys and anchor bolts, potentially fast construction, however would require more coring and PT placement. Team is pursuing 2 alternatives within this option, design performance are same for both alternatives, schedule time may vary: a. BD1- Requires more upfront fabrication, and less time in construction (requires welding during fabrication and also on site during assembly) b. BD2- Less fabrication time and more work during construction, concept includes stacked plates of different size plates clamped together. Construction could start right after milling of plates, with only some plates requires fabrication (no welding required during fabrication or on site during assembly). C. Option C – Pre-Stressed Collars, new design implementation of post tensioning strands - Status: Design at 30%. This option has more concrete work and less steel. The main steel element is fabrication of saddle and post tensioning tie-down. Option C requires unique saddle system and extension of concrete cap construction, not as developed as Option BD.	the selected retrofit options would be around $10M (the amount does not include replacement of 2010 rods). Scope, cost and schedule in development as design progresses. • TBPOC indicated that Department has authorization to go ahead with fabrication of what is needed for Options BD, and C (it was noted that some of material fabricated for Option BD could be used for Option C, also some material ordered for BD2 could be used for the fabrication of BD1), for amount of up to $4.3M which includes some upfront work, detailing, material placement and book for fabrication shop space (the amount was authorized per 4/11/12 TBPOC conference call meeting).
2. Should 2010 bolts be replaced? Salim Brahimi, metallurgist working for ABF (also Chairman of ASTM International	• TBPOC advised the team to start the lab test on a selected number of bolts (to be decided by the team) as

(Continued)

Items	Action
F116 Fasteners Committee), briefed TBPOC that the performance of the 2010 bolts appears thus far to have better uniformity and toughness than 2008. He also indicated that he could not fully answer this question until 2010 bolts have completed the metallurgic examination for the selected bolts (total of 10), this examination would determine the mechanical and physical properties. ABF has completed the In-Situ tensioning of 192 bolts (the 2010 bolts) on 4/9/13, after the 30-day waiting period by May 9th, extended lab test to start on 10 bolts. It was estimated final reports on the extended lab test result would not be available until about one month later (around 6/10/2013). The Chair asked if in the event the 192 bolts (S3, S4, and B1-B4) needed to be replaced; can construction of retrofit work (S1 & S2) and re-installation of 192 bolts be performed at the same time. ABF indicated that the existing truss working platform for the retrofit work would be in the way of re-installing some of the 192 bolts and the 2 operations could not be performed at the same time due to work space limitations and physical interferences. <u>3. What Caused 2008 bolts to fail?</u> Salim Brahimi indicated that the following combination of factors caused this failure: • High-end hardness • Low-end ductility (toughness) • Incomplete transformation of the metal, and • High stress along with some	soon as possible. • Report to TBPOC after workshop. • Team to meet in the afternoon on 4/17/13 to follow up discussion of whether the same bolts will be re-ordered for the 10 replacement bolts, or if supplemental requirements would be specified.

(Continued)

Items	Action
presence of hydrogen Salim stated the material met specification; however, additional requirements could have been given to manufacturer. Salim indicated that the lab result shows hydrogen in the metal. At this point, one could not determine whether this resulted due to manufacturing or due to environment (water in the pier cap).	

Adjourned: 12:00 PM

TBPOC MEETING MINUTES
April 17, 2013, 9:00 AM – 12:00 PM

APPROVED BY:

6/6/13

STEVE HEMINGER, TBPOC Chair
Executive Director, Bay Area Toll Authority

Date

6/6/2013

ANDRE BOUTROS,
Executive Director, California Transportation Commission

Date

6/6/2013

MALCOLM DOUGHERTY
Director, California Department of Transportation

Date

E2 SHEAR KEY (S1 & S2) RETROFIT ALTERNATIVES

ID Tag	ID Text Label	Image	Major Steps	Major Pros	Major Cons
A	Replace Bolts	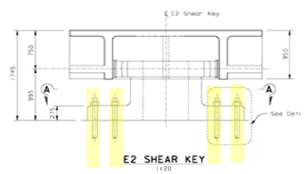	1) Procure Material (Bolts) 2) Develop and construct mockups 3) Remove bolts and slide out shear keys 4) Remove grout and cut anchor bolts at bottom 5) Prepare holes and install new bolts 6) Install shear keys 7) Grout 8) Tension	- No formal design required - If all went well, potentially the fastest and cheapest	- High degree of construction uncertainty, requiring construction related R&D - Requires shear keys to be removed and reinstalled - Requires significant mock-ups (expect design iterations)
BD	Steel Collars	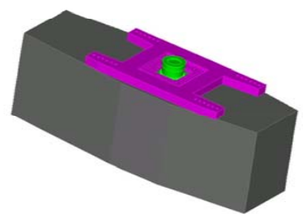	1) Procure material (PT strands/ steel plate/ bolts) 2) Fabricate steel frame 3) Tap holes in existing lower housing and prepare surface 4) Core existing concrete and cast supplemental concrete 5) Install steel frame 6) Grout 7) Tension	- More developed - Potentially simplest but a lot of work - Potentially fastest - Shear keys do not need to be removed	- Potentially most costly - More coring and PT placement required - Most steel fabrication
C	Prestressed Collars	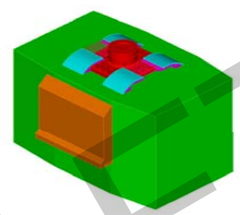	1) Procure material (PT strands/ steel plate) 2) Fabricate steel frame/ saddle 3) Core existing concrete and cast supplemental concrete 4) Install steel frame/ saddle 5) Grout 6) Tension	- Potentially cheapest - Potentially fastest - Shear keys do not need to be removed	- Not as developed as BD - Requires unique saddle system

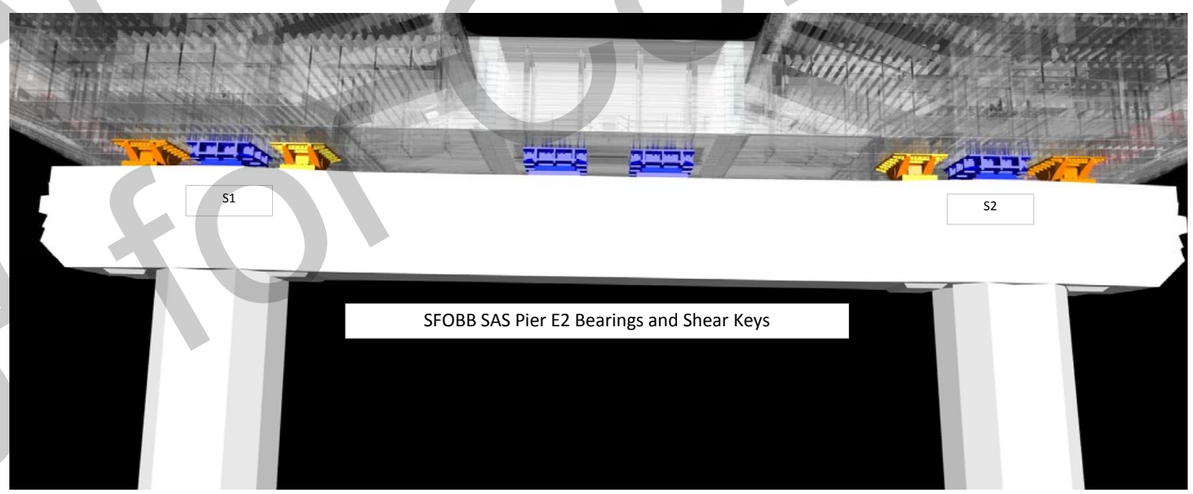

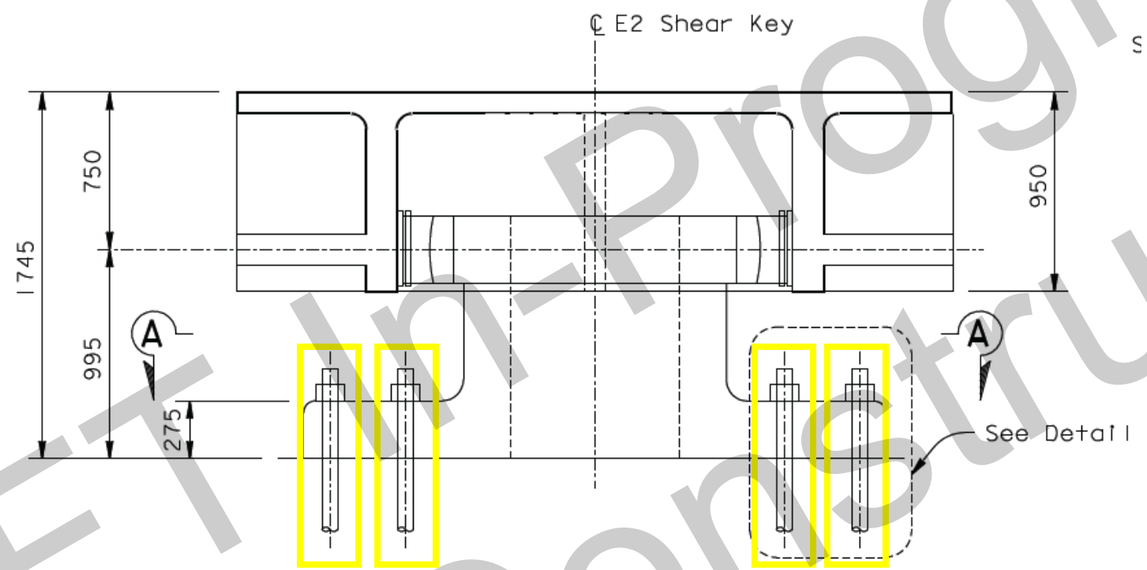

E2 SHEAR KEY

Alternative A

15 APR 2013

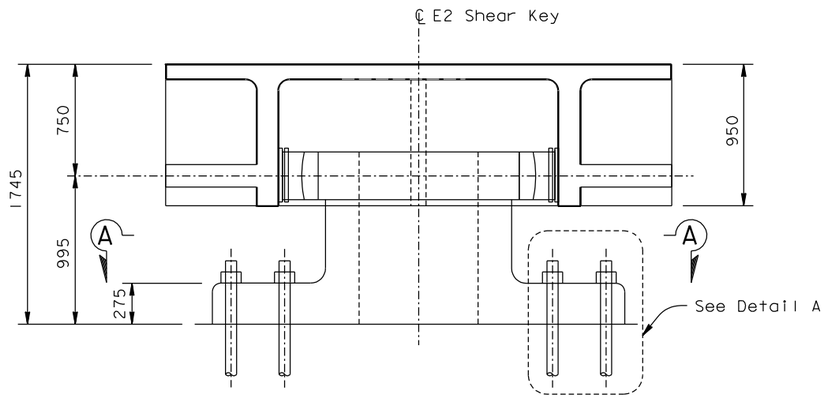

E2 SHEAR KEY
1:20

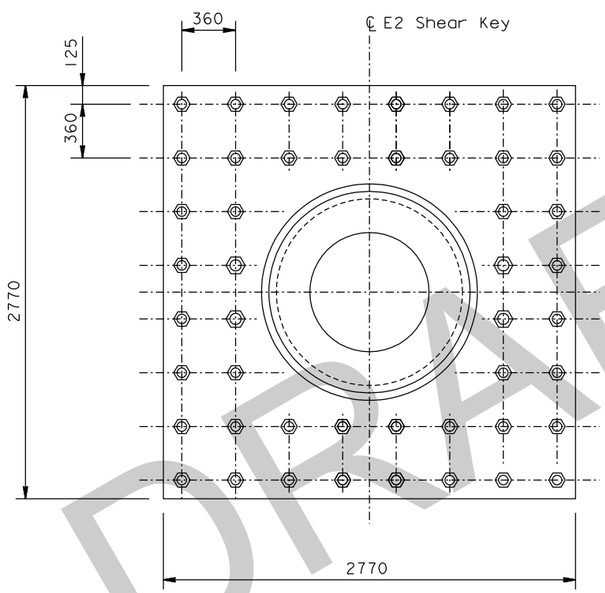

SECTION A-A
1:20

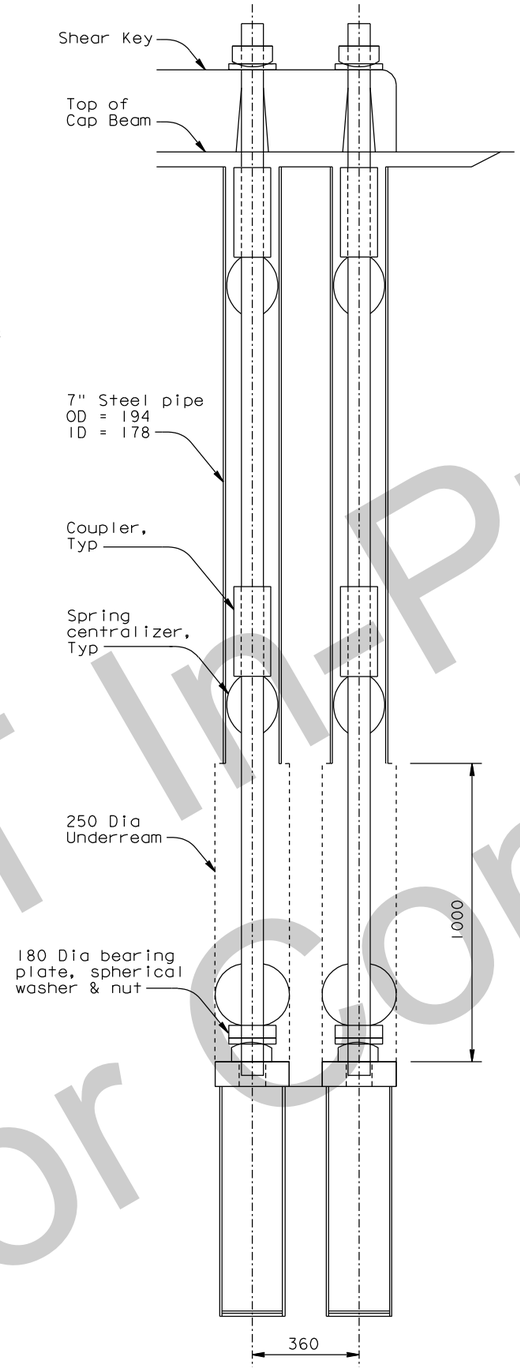

DETAIL A
1:10

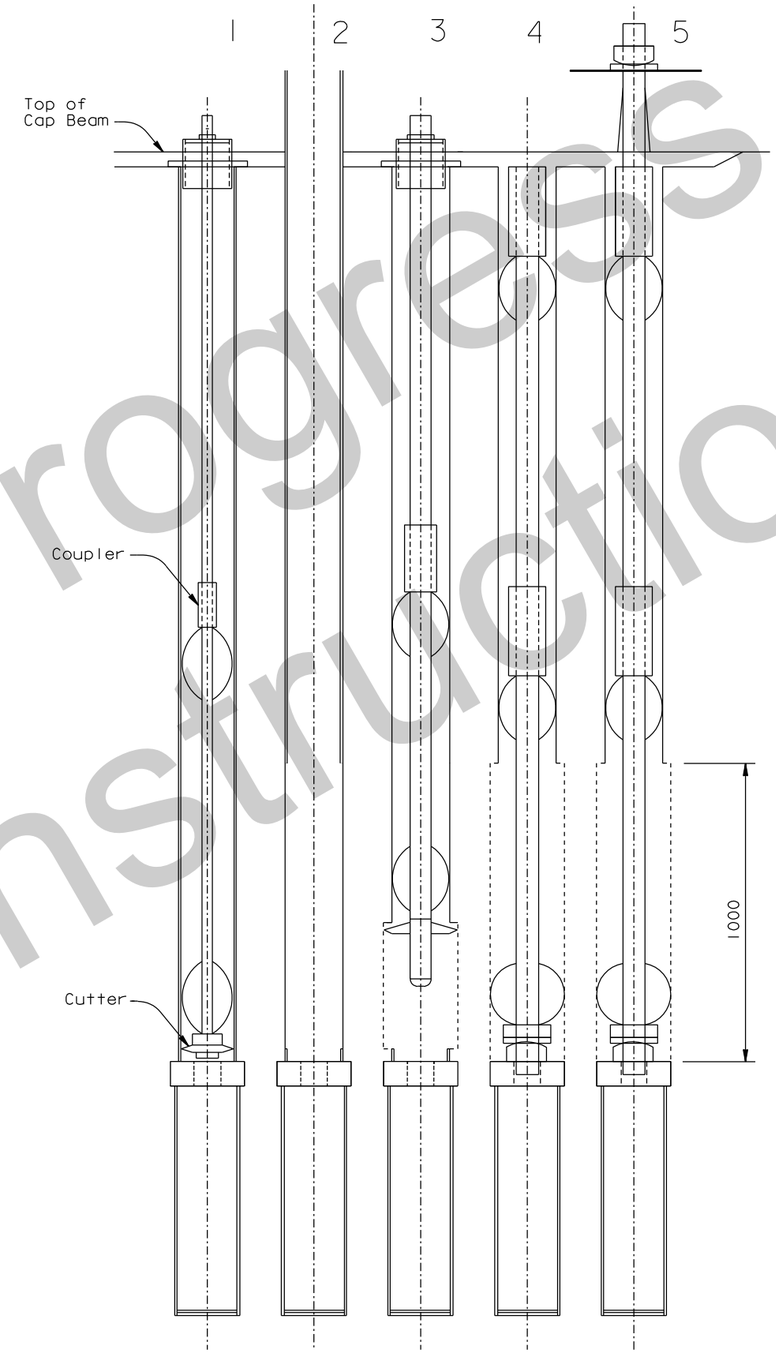

ANCHOR ROD REPLACEMENT SEQUENCE
1:10
(SCHEMATIC)

ALTERNATIVE A

Date: 2013-04-15
File Name: E2 SHEAR KEYS ANCHOR RODS RETROFIT - ALTERNATIVE A (1 of 1)

SFOBB SAS (SAS) Project #04-0120F4

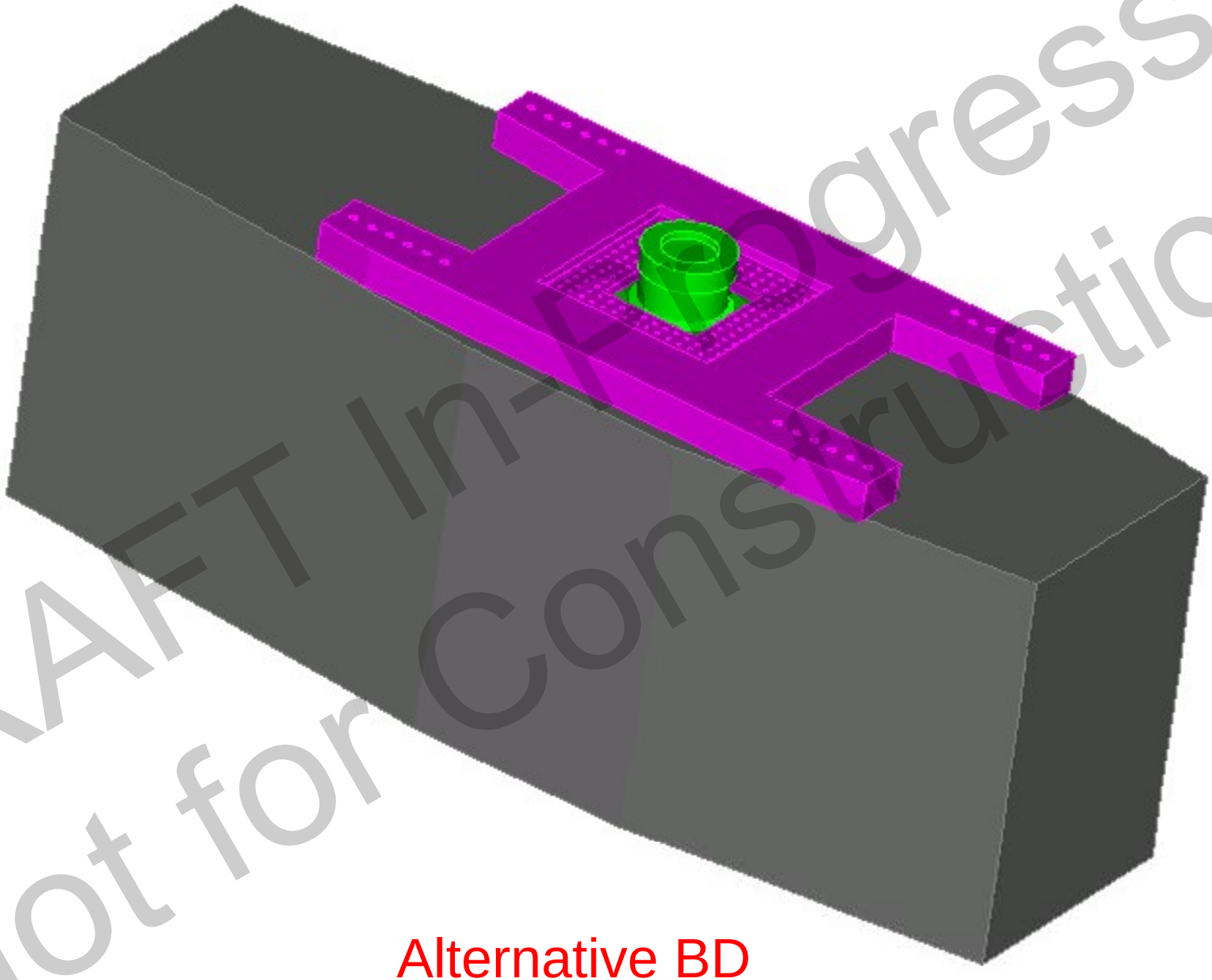

Alternative BD

15 APR 2013

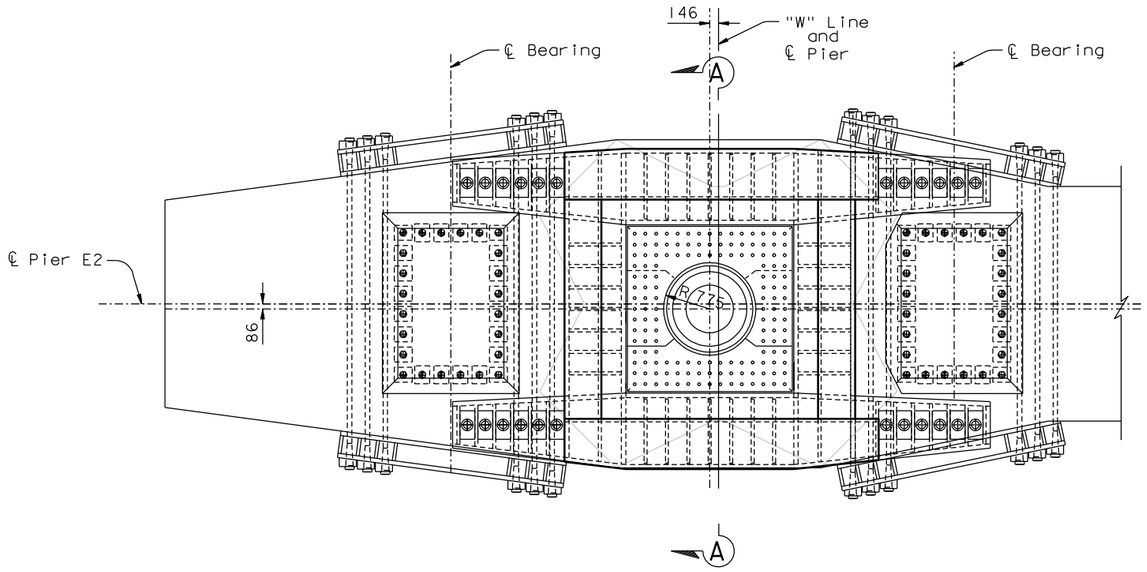

PLAN VIEW
1:50

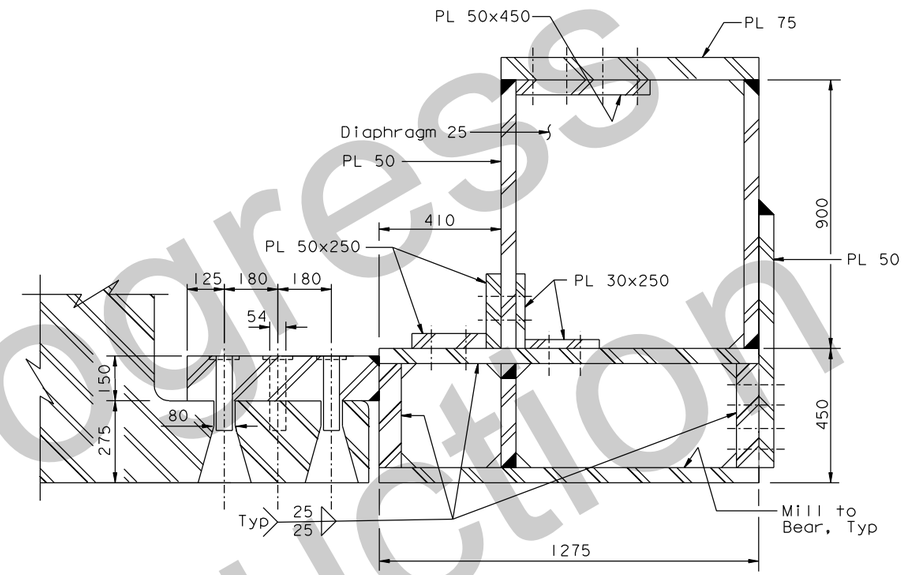

DETAIL A
1:10

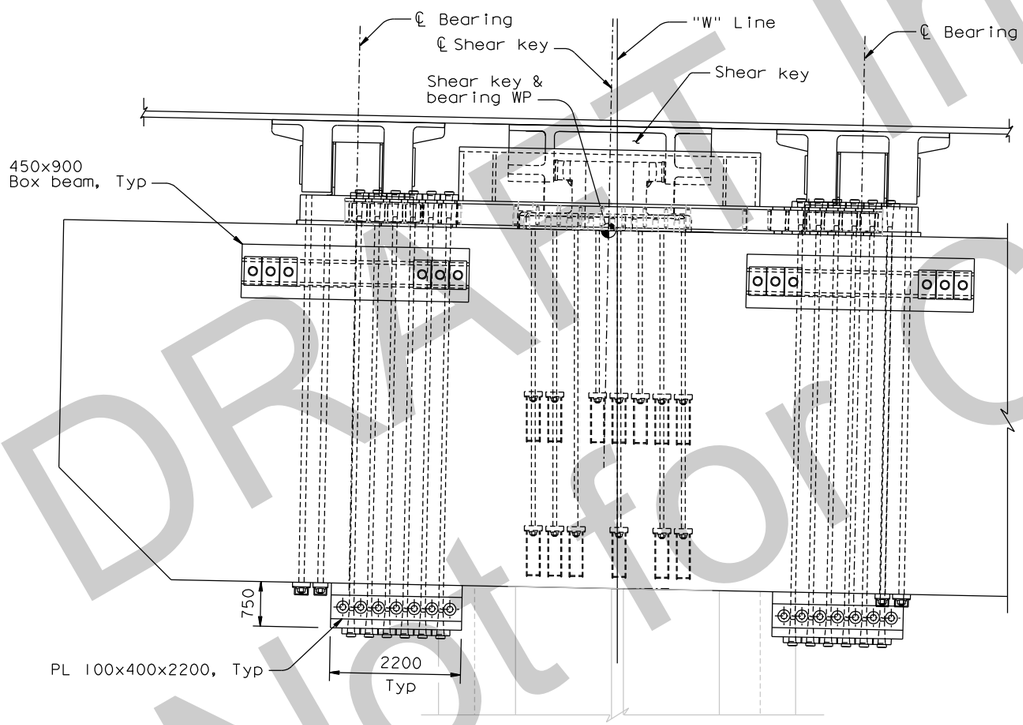

ELEVATION
1:50

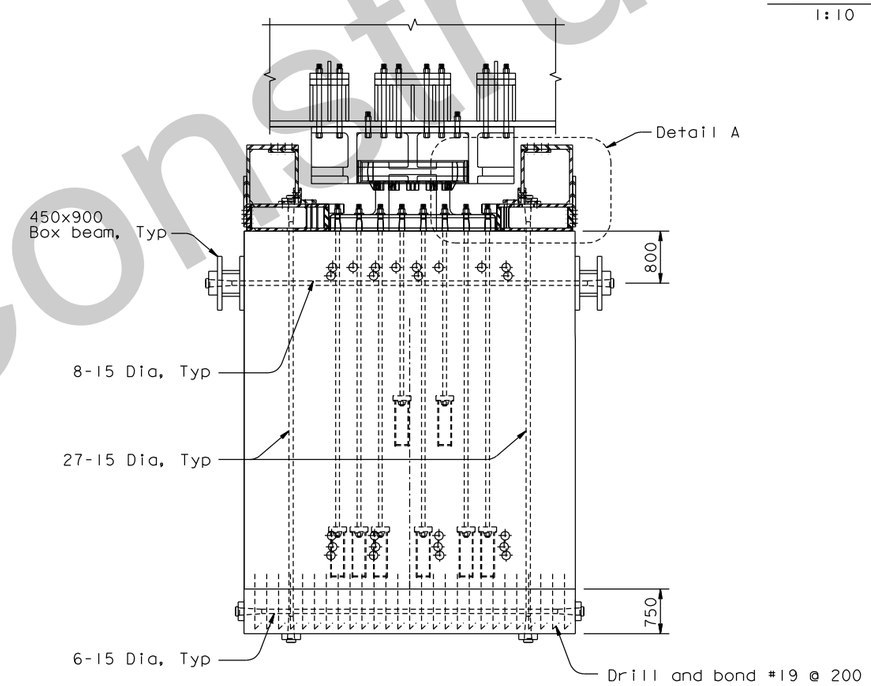

SECTION A-A
1:50

ALTERNATIVE BD(1)

Date: 2013-04-15
File Name: E2 SHEAR KEYS ANCHOR RODS RETROFIT - ALTERNATIVE BD1 (1 of 1)

SFOBB SAS (SAS) Project #04-0120F4

USERNAME => PHua DATE PLOTTED => 15 APR 2013 TIME PLOTTED => 19:56:56

FILE => L:\BB\04-012001\SAS\Working Sketches\Apollo Rivera\E2 Shear Keys Anchor Rods Retrofit\Option D\Anchor Rods Retrofit-Dia.dgn

15 APR 2013

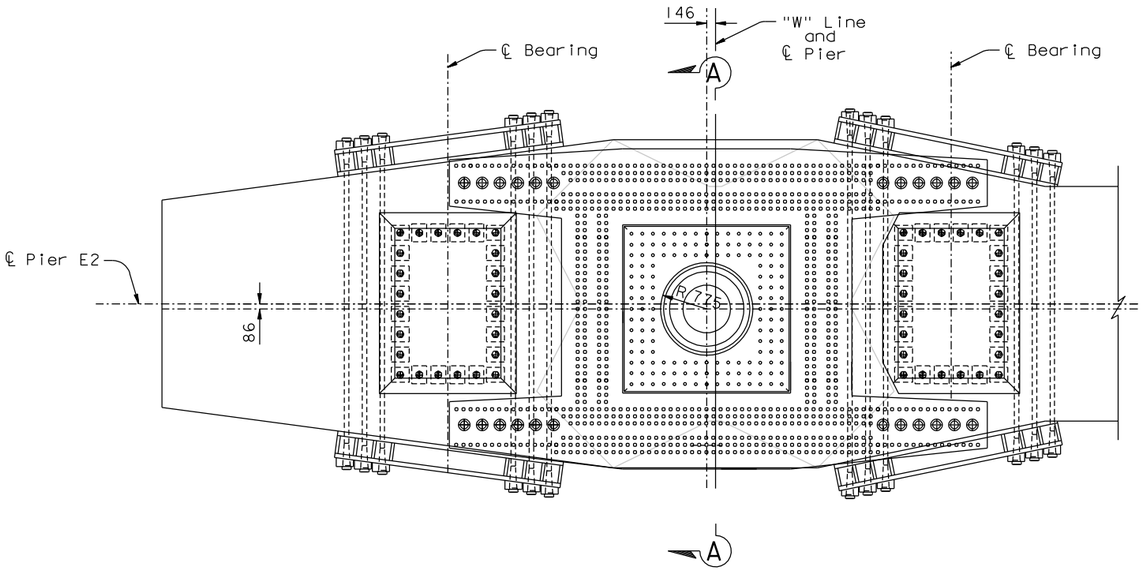

PLAN VIEW
1:50

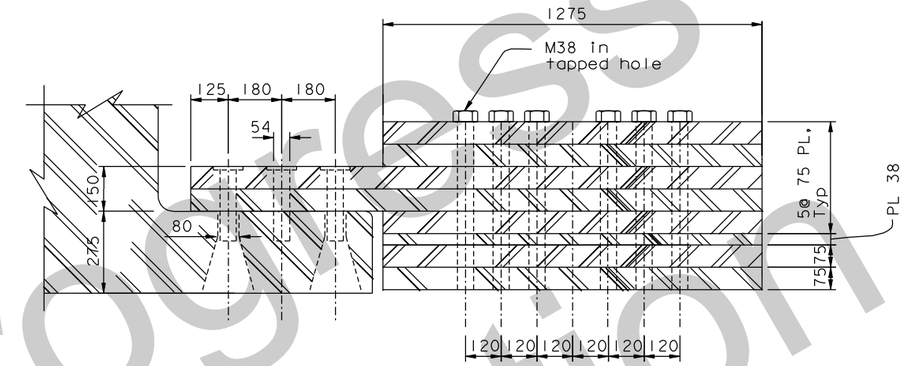

DETAIL A
1:10

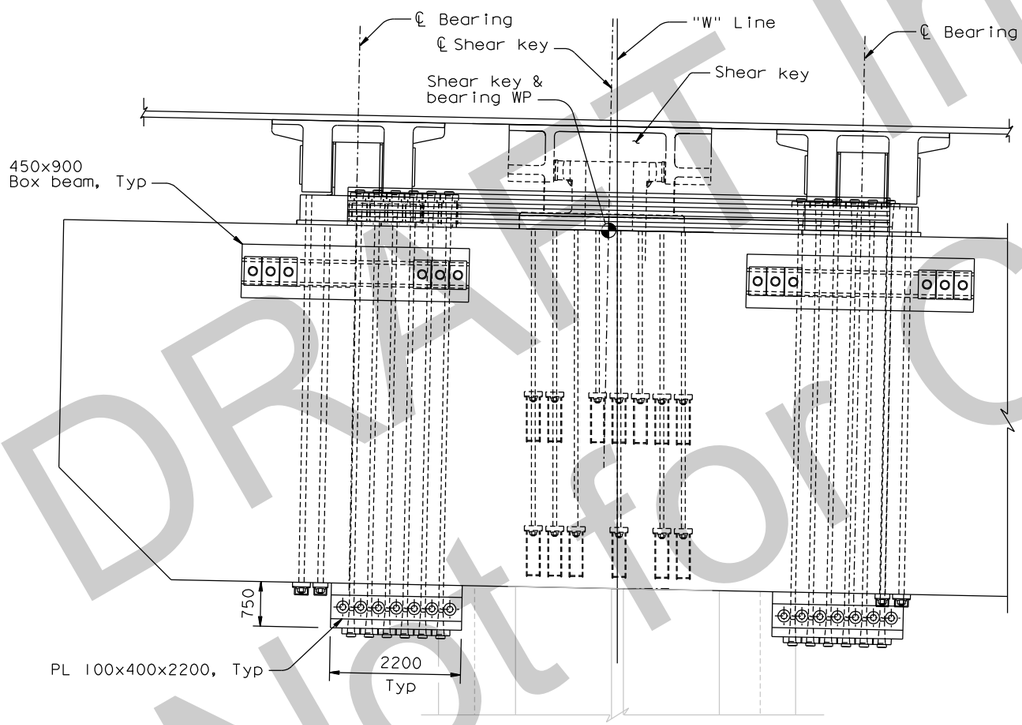

ELEVATION
1:50

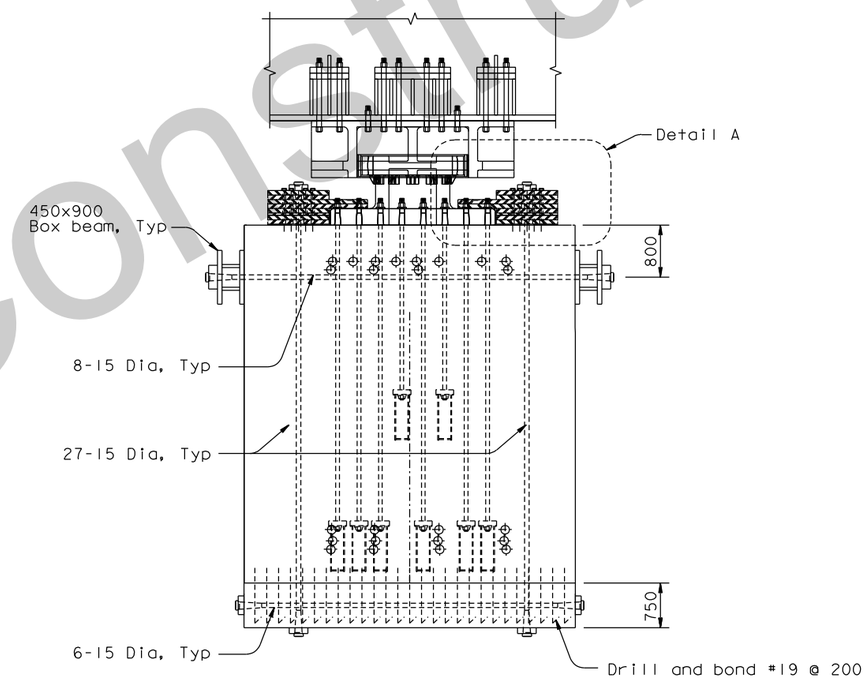

SECTION A-A
1:50

ALTERNATIVE BD(2)

Date: 2013-04-15

File Name: E2 SHEAR KEYS ANCHOR RODS RETROFIT - ALTERNATIVE BD2 (1 of 1)

SFOBB SAS (SAS) Project #04-0120F4

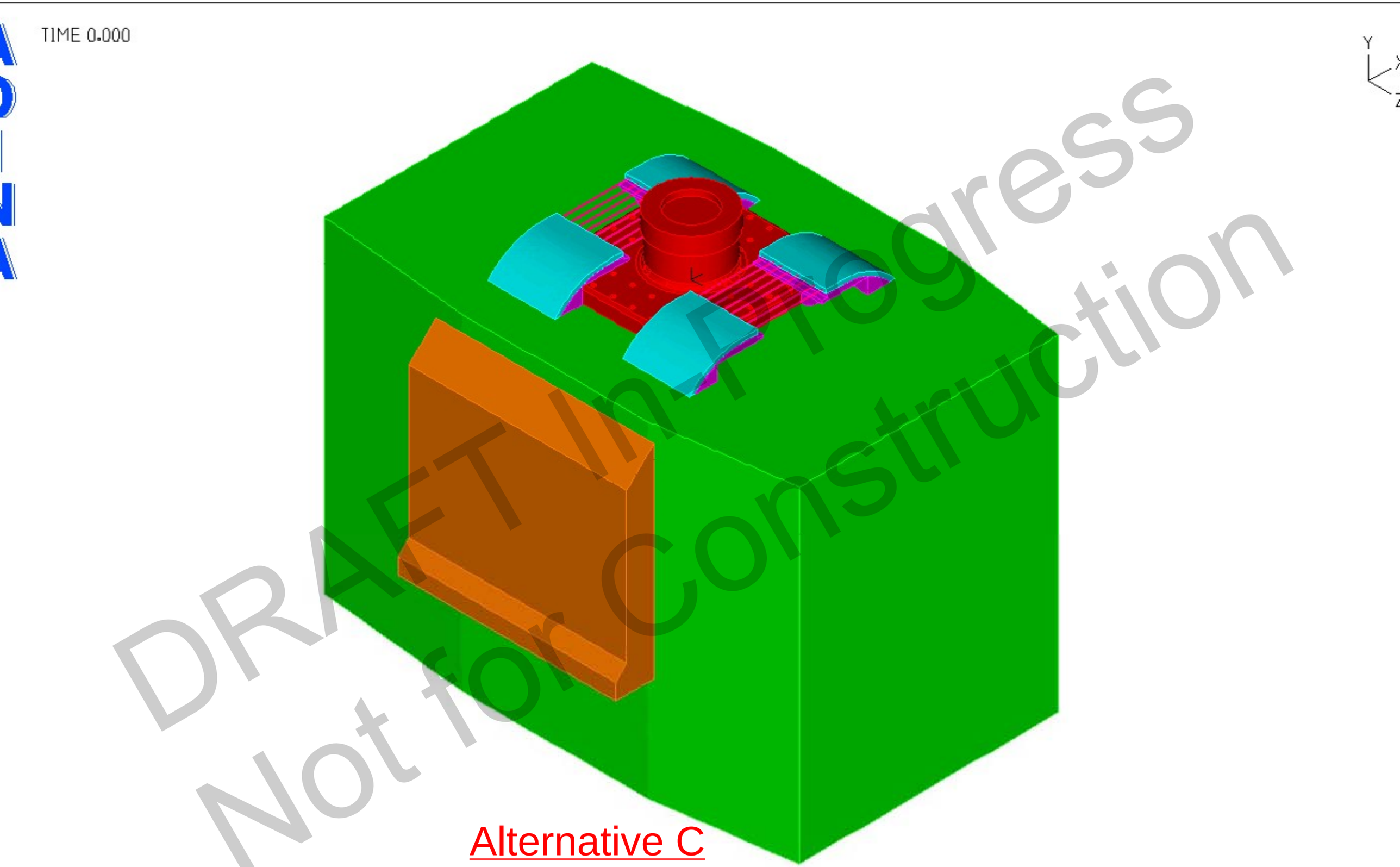

Alternative C

15 APR 2013

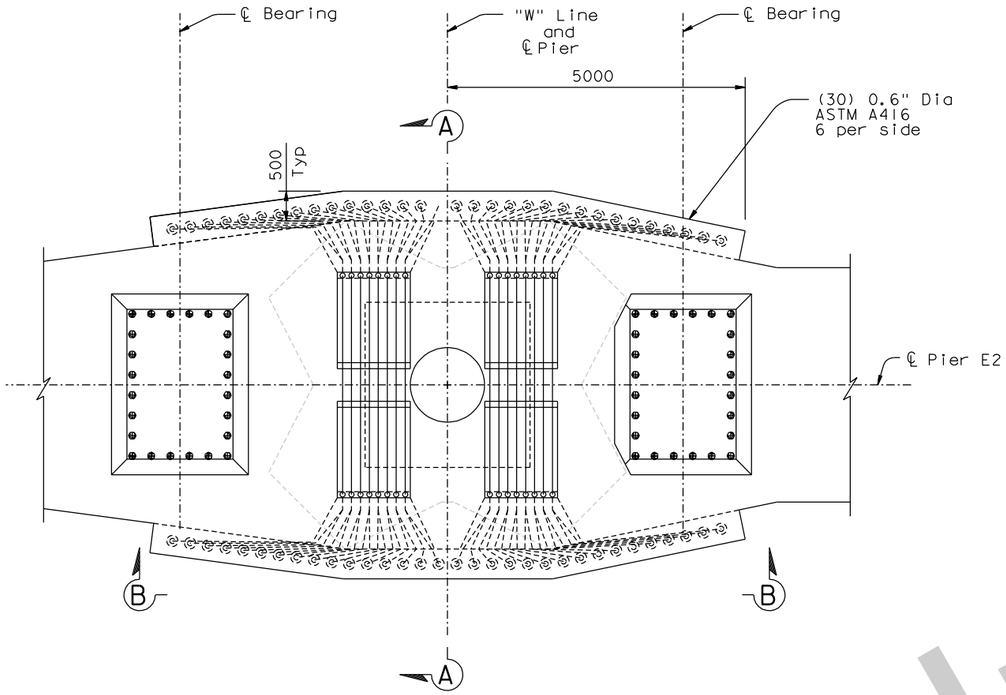

E2 SHEAR KEY - PT OPTION

1:50

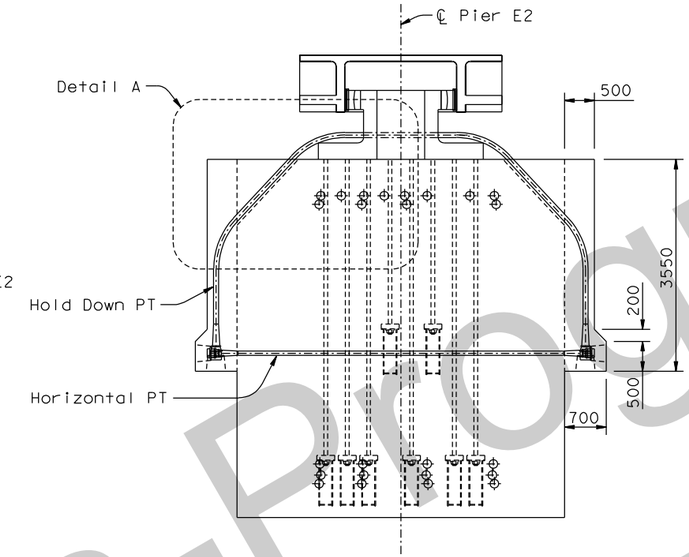

SECTION A-A

1:50

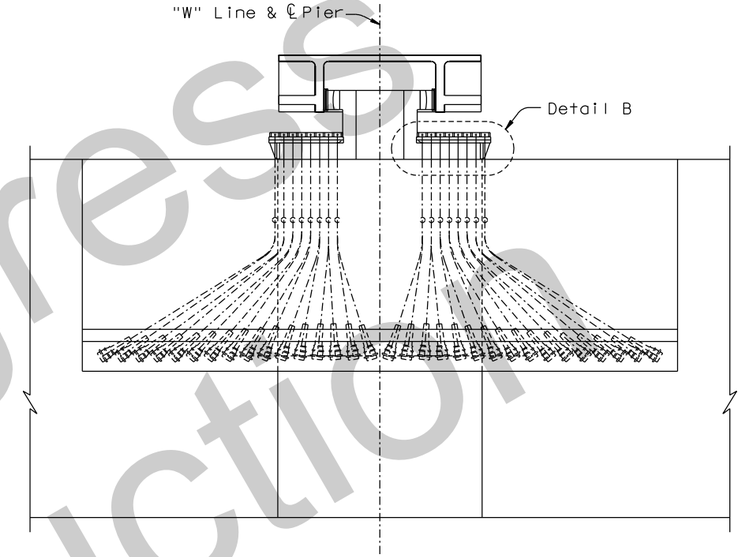

VIEW B-B

1:50

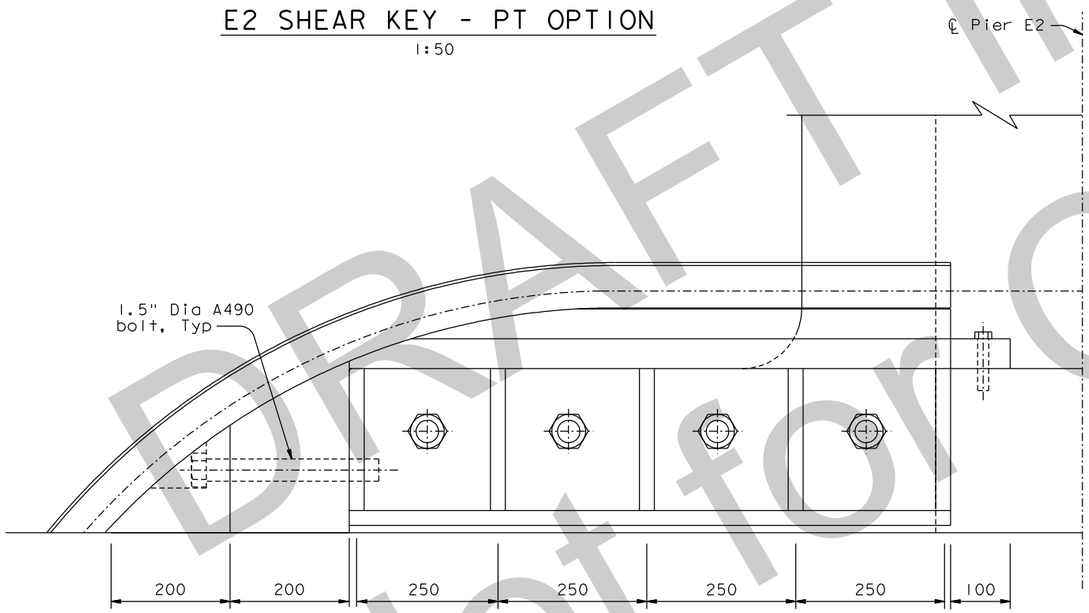

DETAIL A

1:5

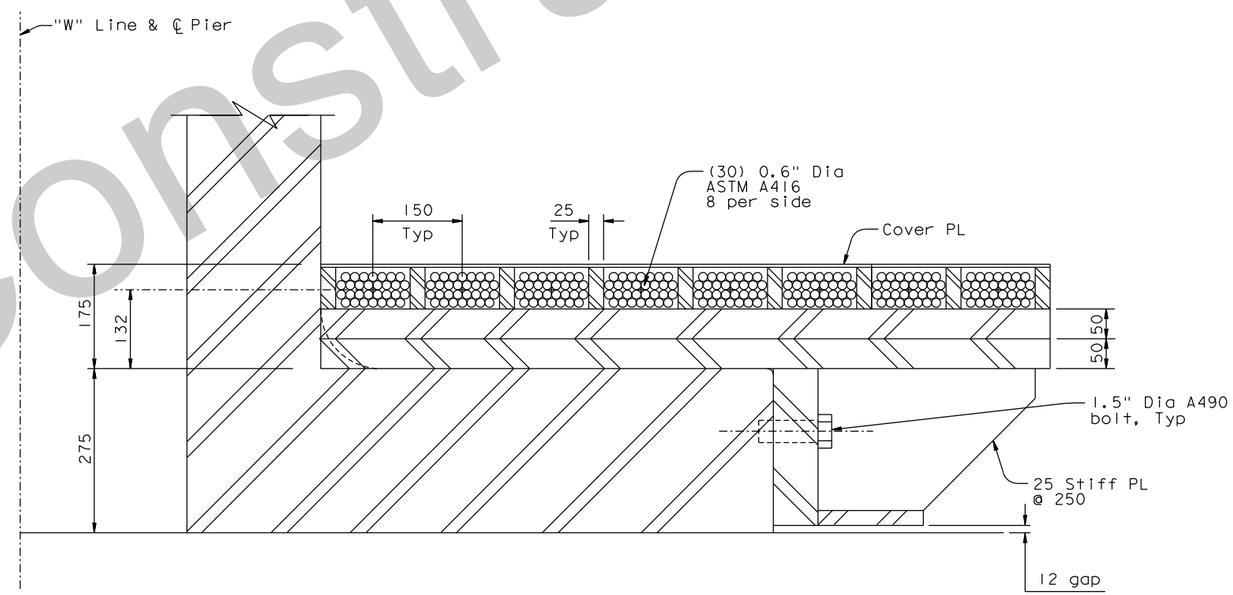

DETAIL B

1:5

ALTERNATIVE C

Date: 2013-04-15

File Name: E2 SHEAR KEYS ANCHOR RODS RETROFIT - ALTERNATIVE C (1 of 1)

SFOBB SAS (SAS) Project #04-0120F4

Location and Item		Component Description	Rod (no head) or Bolt (with head)	Supplier	Diameter (in)	Overall Length (ft)	Overall Length (mm)	Quantity Installed (not including spares)	De-Humidified Zone?	Tighten Method	Final Tension (fraction of Fu or UTS)	Date Tension or Loading Complete	Date Re-Inspected	Notes
E2 Bearings and Shear Keys	1	E2 Shear Key - Connect to Concrete - Above Column, Under OBG [S1, S2]	rod	Dyson	3	17.2	5235	60 } 96	No	Tension	0.7	3/5/2013	daily	32 of 96 rods broke after tensioning
						10.0	3035	36						
	2	E2 Shear Key - Connect to Concrete - Above Bent Cap, Under Crossbeam [S3, S4]	rod	Dyson	3	21.9	6676	96 } 192	No	Tension	0.7	4/1/2013	daily	
		E2 Bearing - Connect to Concrete - Under OBG [B1, B2, B3, B4]	rod	Dyson	3	22.6	6902	64		Tension	0.7	4/9/2013	daily	
						22.2	6777	32						
	3	E2 Shear Key - Connect to OBG [S1, S2]	rod	Dyson	3	4.4	1337	96 } 320	No	Tension	0.7	9/12/2012	4/6/2013 4/8/2013	
						1.8	537	64						
		E2 Shear Key - Connect to Crossbeam [S3, S4]	rod	Dyson	3	4.3	1312	96						
						1.7	512	64						
	4	E2 Bearing - Connect to OBG [B1, B2, B3, B4]	rod	Dyson	2	3.6	1105	224	No	Tension	0.7	9/12/2012	4/6/2013	
	5	E2 Bearing Assembly Bolts (Spherical Bushing Halves)	rod	Dyson for Lubrite for Hochang	1	2.4	733	96	No	Tension	0.61	July 2009	not accessible	Connect 2 halves of the spherical bushing assembly housing together at Lubrite; rods are internal to bearings and **all rods are not accessible** after bearing assembly at Hochang (December 2009 & January 2010); rods tensioned to 0.7 Fy.
	6	E2 Bearing Assembly Bolts (Retaining Rings)	Socket Head Cap Screw	Dyson for Hochang	1	0.2	55	336	No	snug + 1/4 turn	~0.4	January 2010	4/6/2013 (for 32 accessible bolts)	Bolts thread into drill and tap holes to attach retaining rings that secure the Lubrite spherical bushing assembly in the lower housing; bolts are mechanically galvanized, not hot dip galvanized; bolts are internal to bearings and not accessible after bearing assembly at Hochang, except for a small number of bolts in limited areas -> **32 of 336 bolts are accessible**.
Cable Anchorage	7	PWS Anchor Rods - PWS Socket to Anchorage	rod	Dyson	3-1/2	27.9 to 31.8	8500 to 9700	274	Yes	Load Transfer	0.26	9/26/2012	4/6/2013	With DL after load transfer (current condition)
											0.29	N/A	N/A	With DL + Added DL
											0.32	N/A	N/A	Service Load (Group 1)
											0.35	N/A	N/A	SEE (Seismic)
Top of Tower	8	Tower Saddle Tie Rods	rod	Dyson	4	6.0 to 17.5	1840 to 5325	25	Yes	Tension	0.41	7/14/2012	4/6/2013	Tensioned to 0.5 Fy
	9	Turned Rods at Tower Saddle Segment Splices	rod	Dyson	3-1/16	1.5	463	100 } 108	Yes	Tension	0.45	4/6/2011	4/6/2013	Located at 2 field splices connecting the 3 tower saddle segments; tensioned prior to saddle erection, except snug tight rods tightened after tie rod tensioning
						1.4	415	8		snug	~0.1	7/14/2012		
	10	Tower Saddle to Grillage Anchor Bolts	Hex Bolt	Dyson	3	1.2	360	90	Head Yes, Nut No	snug	~0.1	3/25/2013	4/6/2013	Snug tightened before and after load transfer
	11	Tower Outrigger Boom (for Maintenance) at Top of Tower	Hex Bolt	Dyson	3	2.1	630	4	No	snug	~0.1	July 2012	4/6/2013	Act as pins for swinging out and then securing the maintenance outrigger boom at the top of 2 of 4 tower head chimneys. At each boom, one bolt is loaded and other bolt is unloaded in the current boom position. The currently unloaded bolt will be installed snug tight when the boom is swung out for use (future position).
Bottom of Tower	12	Tower Anchor Rods - Tower at Footing (3" Dia)	rod	Vulcan Threaded Products for KOS for KFM (04-0120E4)	3	25.6	7789	388	Yes	Tension	0.48	ongoing	daily	Tensioned to 1800 kN = 404.7 kips Tension before and after load transfer
	13	Tower Anchor Rods - Tower at Footing (4" Dia)	rod		4	25.7	7839	36	Yes	Tension	0.37	ongoing	daily	Tensioned to 2530 kN = 568.8 kips Tension before and after load transfer
East Saddles	14	East Saddle Anchor Rods	rod	Dyson for JSW	2	2.6	800	32	Yes	loose	0	May 2010	4/7/2013	specified gap under nut/washer so no load; use jam nuts to secure structural nuts
	15	East Saddle Tie Rods	Hex Bolt	Dyson	3	4.7	1420	18	Yes	snug	~0.1	4/13/2012	4/7/2013	Snug tightened before load transfer
East Cable	16	B14 Cable Bands - Cable Brackets - at East End of Bridge - Strongback Anchor Rods	rod	Dyson	3	10.3 to 11.1	3129 to 3372	24	No	Tension	0.16	2/8/2013	4/7/2013	neoprene between strongback and cable band is in the grip
W2 Bent Cap	17	W2 Bikepath Anchor Rods	rod	Dyson	~1-3/16 [M30]	1.5	460	43	No	Not Determined Yet		N/A	N/A	The details for the bikepath connection are being redesigned. The 18 anchor rods at the bottom connections will be abandoned. The 25 anchor rods at the top connections will be used and supplemented with additional anchor rods. The new details are not final. These rods will be tensioned on the separate YBITS-2 Contract.