Bay Area
Freeway Concept of Operations

Final Report and Scope of Work for the Interim Center-to-Center System Deliverable No. 37

Prepared by:

Kimley-Horn and Associates, Inc.

April 8, 2003
091598000
Copyright © 2003, Metropolitan Transportation Commission

1 INTRODUCTION 4

1.1 PROJECT OVERVIEW 4
1.2 PROJECT GOALS AND OBJECTIVES 4

2 LEGACY SYSTEMS 6

2.1 SFGO PROGRAM 6
2.2 I-580 SMART CORRIDOR 6
2.3 SILICON VALLEY ITS PROGRAM 6
2.4 CALTRANS DISTRICT 4 7
2.5 TRAVINFO® 7
2.6 SUMMARY OF LEGACY SYSTEMS 8

3 INTERIM CENTER-TO-CENTER DESIRED FUNCTIONS 9

3.1 SFGO PROGRAM 9
3.2 I-580 SMART CORRIDOR 10
3.3 SILICON VALLEY ITS PROGRAM 10
3.4 CALTRANS DISTRICT 4 11
3.5 TRAVINFO® 11

4 INTERIM CENTER-TO-CENTER FUNCTIONAL REQUIREMENTS 12

4.1 REAL-TIME DATA AND VIDEO EXCHANGE 12
4.1.1 Data Collection Functions 12
4.1.2 Video Collection Functions 13
4.2 REAL-TIME DATA AND VIDEO PROCESSING/DISTRIBUTION FUNCTIONS 13
4.2.1 Data Processing/Distribution Functions 13
4.2.2 Video Processing/Distribution Functions 13
4.2.3 Software Functional Requirements 13
4.2.3.1 DATEX-ASN 14
4.2.3.2 CORBA 14
4.2.3.3 XML 15
4.2.3.4 Functional Requirements 15
4.2.4 Hardware Functional Requirements 16
4.3 DEVICE CONTROL FUNCTIONAL REQUIREMENTS 16
4.3.1 Typical Operations 16
4.3.2 Nighttime Operations 16
4.4 FUNCTIONAL REQUIREMENTS SUMMARY 17

5 NATIONAL ITS ARCHITECTURE STANDARDS 17

5.1 ADVANCED TRAVELER INFORMATION SYSTEM 20
5.2 ADVANCED TRAFFIC MANAGEMENT SYSTEM 21

6 BANDWIDTH ANALYSIS SUMMARY 22

7 COMMUNICATIONS NETWORK EVALUATION 23

7.1 PHYSICAL PEER-TO-PEER NETWORK ARCHITECTURE 23
7.1.1 Recommended Peer-to-Peer Network 25
7.2 COMMUNICATIONS MEDIUM ALTERNATIVES 25
7.2.1 Leased Line 25
7.2.2 BART Fiber 25
7.2.2.1 Policies of BART Fiber Use 26
7.2.3 Agency-Owned Fiber Infrastructure 26
7.2.4 Network Security 26
7.2.5 Recommended Communications Medium 26
7.3 COMMUNICATION ALTERNATIVES 27
7.3.1 SONET 27

7.3.2 Gigabit Ethernet *27*
7.3.3 Gigabit Ethernet over SONET *28*
7.3.4 Recommended Communications *28*

8 CONSTRUCTION REQUIREMENTS 28

8.1 HARDWARE REQUIREMENTS 28
8.1.1 Silicon Valley ITS *29*
8.1.1.1 SONET Node 29
8.1.1.2 Ethernet T1 Router 29
8.1.1.3 IP Encoder 29
8.1.2 I-580 Smart Corridor *29*
8.1.3 SFgo *31*
8.1.4 Regional TMC *31*
8.1.4.1 Ethernet T1 Router 31
8.1.4.2 IP Encoder 31
8.2 FIBER SPLICE REQUIREMENTS 31

9 SCOPE OF WORK 32

9.1 GENERAL SOFTWARE REQUIREMENTS 32
9.1.1 Concept of Operations Report *32*
9.1.2 Detailed Definition of Interfaces *33*
9.1.3 Interface Control Document *33*
9.2 SOFTWARE REQUIREMENTS - ESSENTIAL 34
9.2.1 Video *34*
9.2.1.1 Video Device Status 35
9.2.1.2 Process Traffic Video Image 35
9.2.2 Camera Control *36*
9.2.2.1 Video Image Control 36
9.2.3 Sensor Data *36*
9.2.3.1 Traffic Data Distribution Request 37
9.2.3.2 TMC Transfer Sensor Data 37
9.2.3.3 TMC Identity 38
9.2.3.4 Current Road Network State (Sensor Data) 38
9.2.3.5 Current Highway Network State (Sensor Data) 38
9.2.4 Incident Data *38*
9.2.4.1 TMC Incident Data Request 39
9.2.4.2 TMC Transfer Incident Data 39
9.2.4.3 Current Road Network State (Incident Data) – Desirable 39
9.2.4.4 Current Highway Network State (Incident Data) 39
9.3 ADDITIONAL SOFTWARE REQUIREMENTS – DESIRABLE 40
9.3.1 Ramp Meters *40*
9.3.1.1 TMC Ramp Meter Data Request 40
9.3.1.2 TMC Ramp Meter Control and Status 41
9.3.1.3 Ramp Meter Input Data from Highways 41
9.3.2 CMS *41*
9.3.2.1 TMC CMS Data Request 42
9.3.2.2 TMC CMS Control and Status 42
9.3.2.3 CMS Status 42
9.3.2.4 CMS Data 42
9.3.3 HAR *42*
9.3.3.1 TMC HAR Data Request 43
9.3.3.2 HAR Status 43
9.3.3.3 HAR Data 43
9.3.4 Traffic Signals *43*
9.3.4.1 TMC Traffic Signal Data Request 43
9.4 TESTING 44
9.4.1 Software Acceptance Test *44*
9.4.2 Observation Period *44*
9.4.3 Warranty *44*

9.5 TRAINING 44
9.6 GLOSSARY 44

1 INTRODUCTION

1.1 Project Overview

The Metropolitan Transportation Commission (MTC), the California Department of Transportation (Caltrans) District 4, and the California Highway Patrol (CHP) completed the Freeway Concept of Operations Study for the San Francisco Bay Area in July 2002. The purpose of the Concept of Operations was to identify strategies to effectively manage recurring traffic congestion, incident response, and traveler information on freeways in the Bay Area. The Concept of Operations project resulted in an Action Plan to guide and coordinate multi-agency efforts to improve Freeway Operations. One of the Actions, development of a system for real-time exchange of transportation data and video, is addressed in this report.

This report consolidates information from the ***Draft Center-to-Center Functional Requirements*** (Deliverable #35, December 11, 2002), ***Draft Final Report on Center-to-Center System*** (Deliverable #36, January 7, 2003), and ***Draft Scope of Work for Center-to-Center System*** (Deliverable #37, February 25, 2003), and reflects the comments received on those previous deliverables. This report presents a description of the existing legacy systems that will participate in the Interim Center-to-Center (C2C) System; identifies the functions that are desired by each participating system; and presents a Scope of Work for developing the Interim C2C System.

1.2 Project Goals and Objectives

The goal of the San Francisco Bay Area's Interim C2C System project is to implement a system that enables the real-time exchange of data and video between the Smart Corridors and the Regional Transportation Management Center (TMC), which includes Caltrans TMC and TravInfo®. In addition to previous investments for a center-to-center system by TravInfo®, Caltrans and the Smart Corridors, MTC has $400,000 available to implement the initial phase of the system. The functionality of the Interim C2C System may be expanded if additional funds become available.

The Interim C2C System is expected to be a short-term solution to the Bay Area's existing need for real-time exchange of data and video, and will be upgraded or replaced as Caltrans develops statewide TMC software. New software will be developed in the next few years for use at all Caltrans District TMCs. Once Caltrans District 4 transitions to that new system, the Interim C2C System may be upgraded or replaced. The goal of the Interim C2C System is to meet the Bay Area's need for center-to-center communications while the new software is developed for Caltrans. In order to maintain real-time communications with Caltrans TMC as it migrates to the future statewide software, the Interim C2C System will rely on TravInfo® to maintain a stable, two-way interface with Caltrans' TMC. The existing TravInfo® interface with Caltrans TMC is limited in scope and will need to be expanded to include video exchange and other functions defined as essential for the Interim C2C System. This approach will allow the participating agencies to exchange real-time data and video during the period when new software is being developed for Caltrans.

TravInfo® and the participating Smart Corridors use, or are planning to use, a DATEX-ASN standard for C2C communication. The objective of this Scope of Work is to implement a cost-effective peer-to-peer Interim C2C System in the Bay Area based on DATEX-ASN and other NTCIP standards. Within the overall goal of developing a peer-to-peer system, the highest priority is to establish two-way communications between the Regional TMC and each participating Smart

Corridor TMC. If necessary, exchange of data and control between the Smart Corridors may be postponed to a later phase.

This Final Report and Scope of Work is intended to guide the effort to implement the peer-to-peer Interim C2C System. The initial step in the implementation effort will be to produce a detailed Interface Control Document (ICD). This ICD will take into account current capabilities of existing systems and the prioritized functional requirements of the Interim C2C System presented in this report. The ICD document shall address both the limited functionality of the initial implementation, and the expansion of functionality anticipated in future phases. As a result, future expansion shall be accomplished without requiring modifications to previously operating functionality.

The following list of relevant standards shall be considered during the development of the ICD. This list is current based on information provided at www.ntcip.org. Standards reviews and updates are ongoing and the following list will be updated to current standards based on published standards.

- Application Profile for Data Exchange ASN.1 (DATEX) - NTCIP 2304
- Base Standard: Octet Encoding Rules (OER) - NTCIP 1102
- Subnet Profile for Ethernet - NTCIP 2104
- Information Profile for DATEX - NTCIP 2501
- Message Sets for External TMC Communication (MS/ETMCC) - ITE TM 2.01
- Standard for Functional Level Traffic Mgmt Data Dictionary (TMDD) - ITE TM 1.03
- Standard for Traffic Incident Mgmt Message Sets for Use by EMCs - IEEE P1512.1
- Internet (TCP/IP and UDP/IP) Transport Profile - NTCIP 2202
- Advanced Traveler Information System (ATIS) Message Sets – SAE J2354
- Rules for Standardizing Street Names and Route IDs - SAE J2529
- Messages for Handling Strings and Look-up Tables in ATIS Standards – SAE J2540

Each system participating in the Interim C2C System will support exchange of data, video, and commands as specified by an Interface Control Document. The Interim C2C software will be part of each control center within the system, and will enable the data and video to be displayed on existing equipment at each control center. In order to ensure this level of interoperability, it is recommended that the developers of the existing systems be involved in a collaborative effort to develop the ICD. The ICD could be used to guide the development of other systems so that they can participate in the C2C System.

2 LEGACY SYSTEMS

The initial participants in the Interim C2C System are expected to be SF*go*, I-580 Smart Corridor, Silicon Valley ITS, and the Regional TMC (Caltrans TMC and TravInfo® TIC). Each system is described in this section.

2.1 SFgo Program

The SFgo Program is an integrated transportation management system that is being developed under the leadership of the City of San Francisco Department of Parking and Traffic (DPT). The San Francisco Municipal Railway (MUNI), San Francisco County Transportation Authority, Metropolitan Transportation Commission, Caltrans, TravInfo®, CHP, and the Federal Highway Administration are working cooperatively on this project. The goal is to minimize delays for all transportation modes, real-time traffic incident response, address special event traffic, and convey real-time, accurate, and useful traveler information. The initial phase of SF*go* should come on-line in 2003/04. San Francisco is currently completing the design of a fiber connection to BART fiber via the Civic Center BART Station. The connection will be completed by the end of 2003 as part of the initial phase of the program.

2.2 I-580 Smart Corridor

The I-580 Smart Corridor project (previously known as the Tri-Valley Smart Corridor project) is intended to optimize travel along the I-580 corridor and adjacent arterials by integrating freeway and arterial operations, and establishing an integrated traveler information system to enhance mobility across all modes. The I-580 Smart Corridor includes upgrades to the traffic signal systems in the Cities of Pleasanton, Dublin, and Livermore that support interoperability between the jurisdictional traffic operations centers and intelligent corridors with related sensors and traveler messaging devices. During 2002/03, construction of the initial phases will be completed and operations initiated. All video and data are being collected and displayed via the Naztec Streetwise system. Video is displayed on local workstations with camera control separate from the Naztec system. Vehicle data (volume, speed, and occupancy) are displayed on the Naztec graphical user interface.

The project also provides for future interoperability between the I-580 traffic operations centers, the Regional TMC in Oakland, and the existing Alameda County Traffic Operations Center in Hayward, which manages the Castro Valley signals. Fiber optic cable has been installed on the I-580 Smart Corridor and passes in the vicinity of the Dublin/Pleasanton BART Station. Completion of the connection between the I-580 Smart Corridor and the Regional TMC entails installation of approximately one-half mile of fiber and a SONET hub. In the interim, a leased line could be used to establish communications for the C2C system between the I-580 Smart Corridor and the Regional TMC.

2.3 Silicon Valley ITS Program

The Silicon Valley ITS Program is a multi-year, multi-phase, program to install ITS in the South Bay's roadway network. This program uses advanced technologies and real-time system management techniques to help keep all transportation facilities within the Highway 17/Interstate 880 corridor operating at maximum efficiency, even following a major disruptive incident.

The Silicon Valley ITS program collects sensor data via the IBI Data Exchange Network. Data is shared and displayed with each member of the Silicon Valley ITS program via the Corridor-Wide Display. CCTV video is collected and routed via a Pelco system with a central Network Interface

Unit. Video is shared with members of the Silicon Valley ITS program by the use of Pelco keypads in each TMC and the central Network Interface Unit.

The Silicon Valley ITS Program already has numerous Caltrans cameras included in their system. The current agreement is that the Smart Corridor partner can receive full motion real-time video and be allowed to control the camera by selecting from several preset views. Caltrans will have priority over the cameras and will regain control and/or restrict the camera feed distribution when necessary.

A fiber connection between Caltrans District 4 and the San Jose TMC will be completed as part of the Fremont-Milpitas project currently under construction. This project includes a fiber connection to the BART fiber via the Fremont BART Station.

Silicon Valley ITS will procure one SONET hub (Cisco Model ONS 15454) through an existing project. This hub is identical to other Caltrans hubs and will be purchased by San Jose. The SONET equipment will need to be installed and configured on a future project.

2.4 Caltrans District 4

Caltrans District 4 has an extensive TMC located on the 6th floor of its headquarters building in downtown Oakland. The TMC includes 19 operator workstations and a large video wall, as well as equipment rooms, a computer room, emergency management room, and a visitor area. CHP is collocated at the Caltrans TMC and is assigned four workstations and a connection to six remote terminals at the CHP Command and Control Center in Vallejo. Caltrans District 4 has an interface with CHP such that incident data obtained by CHP is automatically displayed on the Caltrans map in the TMC. Much of the information collected by Caltrans is or will be distributed to TravInfo® and PATH's PeMS.

Caltrans video switching is currently accomplished through existing VNCI equipment. Caltrans is beginning to evaluate migration to a centralized video server with IP unicast video collection and multicast distribution. Sensor and incident data are collected and stored by the ATMS system developed by Transcore/Gardner Systems. CMS data and control is accomplished through the use of a Caltrans proprietary program called SignView to allow operators to monitor CMS and send messages to be displayed on CMS. Caltrans communicates with HAR equipment through touch-tone telephone. Arterial traffic signals on the Caltrans system are linked via CT-NET. All traffic signal data and monitoring is accomplished through CT-NET. CT-NET system is not interfaced with the freeway management system components in the TMC.

Caltrans has begun developing a SONET communication backbone which currently links the Regional TMC with the existing Caltrans hub located near the Walnut Creek BART station. This SONET backbone operates at an OC-48 level (2.488 Gbps) and currently functions as a folded (collapsed) ring topology between the two points. The backbone utilizes four existing BART fibers that have been dedicated for Caltrans use.

2.5 TravInfo®

TravInfo® is the Bay Area's regional advanced traveler information system. The TravInfo® program is managed by MTC. MTC has hired a Systems Manager (PB Farradyne) to plan, design, manage and operate the program for a six-year duration. TravInfo® currently receives freeway information from Caltrans and incident data from the CHP (via the Computer Aided Dispatch system) and will soon be collecting freeway information via ETC toll-tag readers. TravInfo® is located directly above the Caltrans District 4 TMC.

A Silicon Valley ITS DEN interface is installed at the Regional TMC. This server allows Caltrans to request and view data and video on the SV-ITS network, but it will not be directly interfaced with the Caltrans TMC software or TravInfo®. TravInfo® will begin receiving mid-block speeds and volumes in both directions from the East Bay SMART Corridor later this year. The data is being collected by nearly 60 microwave sensors along the smart corridor arterials.

2.6 Summary of Legacy Systems

There are several legacy systems that must be addressed with the C2C system. A summary of the legacy systems is included in the following table.

Agency	Video Switching	Camera Control	Vehicle Data	Incident Data	Ramp Meters	CMS	HAR	Traffic Signals
Caltrans	New Caltrans CCTV server	New Caltrans CCTV server	ATMS by Transcore/ Gardner Systems	ATMS by Transcore/ Gardner Systems	ATMS by Transcore/ Gardner Systems	SignView (Caltrans)	Touch Tone Telephone	CTNET
Silicon Valley ITS	Pelco	Pelco	IBI – DEN	IBI – DEN	n/a	Transcore	Touch Tone Telephone	IBI – DEN
SFgo	TBD	TBD	TBD	TBD	n/a	n/a	n/a	TBD
I-580 Smart Corridor	Naztec Streetwise	n/a	Naztec Streetwise	n/a	n/a	n/a	n/a	Naztec Streetwise

The fact that each smart corridor and Caltrans have different legacy systems presents constraints to the development of the center-to-center system. Several custom software interfaces will have to be developed to link with the three Smart Corridors and Caltrans.

3 INTERIM CENTER-TO-CENTER DESIRED FUNCTIONS

The Smart Corridors, Caltrans and TravInfo® have given input on the functions that they would like to see accomplished through the C2C efforts. These desired functions were discussed and refined to develop a consensus on which elements should be included as essential functional requirements.

3.1 SFgo Program

SFgo is interested in providing and receiving any information that is collected by Caltrans. The most important information is what level of traffic is trying to enter the city and what incidents are on the freeways that may impact traffic flow in the city.

For traffic entering the city, count data, video, and metering rates at the toll plaza would be valuable information to ascertain what appropriate measures should be taken to accommodate the traffic. To accommodate traffic attempting to leave the city, incident locations and severity information provided to the SFgo Program would help prepare for the traffic impacts to local streets. CHP or TravInfo® could provide incident data.

Vehicle data should be in the form of real-time count and occupancy information at 30-second intervals. Preferably, lane-by-lane information will be most beneficial to determine the amount of traffic entering the city versus traffic that is bypassing the city. However, exit ramp traffic data would be sufficient for traffic that is entering San Francisco, but it will not provide data on adjacent freeway conditions.

Access to live, full motion video would be beneficial to SFgo to supplement the count data provided by Caltrans. SFgo desires to have PTZ control of the Caltrans cameras when not in use by Caltrans. If full PTZ control is not feasible, presets or view requests are desirable, understanding that Caltrans has ultimate control of the cameras.

SFgo would like the ability to deploy messages on Caltrans CMS to alert drivers of traffic congestion or traffic impacts on local streets. Throughout the year, there are countless special events and road construction activities that have an affect on the circulation through San Francisco. At a minimum, the partners would like to be able to send a message or request to Caltrans to display relevant messages.

Although HAR is a useful traffic management tool, San Francisco DPT has found that there is significant interference produced by the overhead MUNI lines. As a result, HAR via AM frequency is not an effective means of conveying messages to drivers. If FM frequency HAR is implemented, this could be useful to the SFgo partners.

The only metering currently in use in the vicinity of San Francisco is the SFOBB toll plaza metering. SFgo would like to know when the metering is turned on and what the metering rate is. This would help determine how much traffic will be crossing the bridge and potentially entering the city streets.

SFgo is willing to share all data collected on the corridors within the Program limits. Information on count data, live video feeds, traffic signal data, and arterial CMS will be available to Caltrans. Currently, San Francisco DPT only staffs the TMC from 9 AM to 5 PM during peak traffic flows. SFgo is willing to allow Caltrans to be able to operate all cameras and arterial CMS during the night when the SFgo TMC will not be staffed.

3.2 I-580 Smart Corridor

The major concern in the I-580 corridor is the identification of freeway incidents that may result in additional traffic diverting to local streets. Since there are no significant viable alternate routes to Interstates 580 and 680, the additional traffic could cause major traffic congestion on the arterials beyond what is already being experienced.

Data collected by the count stations on Caltrans' freeways would be the most valuable information to share with the I-580 TMC. The desirable format would be one that simply alerts partner agencies that a potential incident has occurred on the freeway. This could be done through the Caltrans system and sent to the I-580 TMC in the form of a potential incident "flag"; or the count data could be sent to the I-580 TMC with the Naztec Streetwise system processing the data through an incident detection algorithm to produce a potential incident flag.

For video, it is not essential for the I-580 Smart Corridor to receive full motion video. Still images every 2-3 seconds would provide adequate confirmation of a freeway incident or congestion levels. The I-580 Smart Corridor partners desire two fixed CCTV cameras at each interchange to view traffic in each direction along the freeway. If fixed cameras are not feasible, presets on a pan-tilt-zoom camera may be necessary. Existing fixed arterial cameras will be used to monitor the traffic impacts on the arterials.

The I-580 partners would like to receive information about the ramp metering rates and have operational control to adjust the rates. However, Caltrans has indicated that operations and maintenance of the ramp meters needs to remain with Caltrans. The main issue is that the metering rates need to be coordinated with the interchange traffic signals. The I-580 Smart Corridor partners are currently operating and maintaining the interchange traffic signals.

On northbound Interstate 680 south of Sunol Boulevard, the I-580 Smart Corridor would like to operate an Extinguishable Message Sign (EMS) located on the freeway that alerts drivers when metering is being utilized on Sunol Boulevard entering Pleasanton. This would provide drivers information that will help them evaluate their best travel route.

The I-580 Smart Corridor partners desire the use of Highway Advisory Radio (HAR). They feel that HAR is a better alternative to providing route guidance than the use of freeway CMS. With HAR, drivers will not be requiring to read a message on an overhead sign.

3.3 Silicon Valley ITS Program

The Silicon Valley ITS Program already has numerous Caltrans cameras included in their system. The current agreement is that the Smart Corridor partner can receive full motion real-time video and be allowed to control the camera by selecting from several preset views. Caltrans will have priority over the cameras and can regain control and/or restrict the camera feed distribution when necessary.

The Silicon Valley ITS program intends to continue with this agreement for video sharing. Although the video sharing agreement has already been established, it is currently being done using two separate communications paths to each camera. The first path is by fiber to San Jose, allowing the Silicon Valley ITS partners the ability to receive video images; the second path is via DSL or ISDN that connects directly to Caltrans via leased lines. Caltrans pays monthly leasing costs to have this separate connection so this is not the most efficient solution. A physical fiber connection between the Silicon Valley ITS TMC and Caltrans District 4 will eliminate the recurring leasing costs. The Silicon Valley ITS Program will share all video within the system but will have priority to control over their own cameras when necessary.

The Silicon Valley ITS Program would also like to receive freeway count data and incident data to be aware of potential impacts to the arterials due to traffic diverting to alternate routes. Count data should be in the form of real-time, directional summaries and exit ramp volumes, if available. Lane-by-lane counts are useful but not essential.

Incident data will be beneficial to the Silicon Valley ITS. This information should include incident location, severity, projected duration, and how traffic on the freeway is being directed.

Silicon Valley partners would also like to be aware of messages that are being displayed on CMS in the area to prepare for additional traffic impacts to the arterials. For local special events, the Silicon Valley ITS would like to have the ability to request messages to be displayed on Caltrans CMS.

The Silicon Valley ITS Program is and will be sharing with Caltrans all information collected on local arterials. This information includes full motion real-time camera feeds, vehicle count data, and incident information on arterials. Some of this functionality does not currently exist, but will exist with ongoing SV-ITS development.

The Silicon Valley ITS data exchange network is based on fully compliant NTCIP C2C communications protocol (DATEX-ASN) and TMDD data formats. It supports real time traffic counts (volume, speed, and occupancy), ramp metering information, and arterial traffic signal data from freeway traffic management systems; as well as incident information, CMS, HAR, and CCTV camera status information from partner agency TMCs (centralized, distributed and arterial master based) via the DEN/CWD system.

3.4 Caltrans District 4

Caltrans currently collects vehicle data every 30 seconds and receives full motion real-time video from PTZ cameras. This information can become available to the Smart Corridors for local use. Full motion video will be shared with the Smart Corridors with the caveat that Caltrans needs to have priority to view and control their own cameras when necessary, and must have the authority to prohibit the Smart Corridors from viewing a camera image if necessary. Caltrans would like the ability to receive full motion real-time video from the Smart Corridor cameras when requested.

For ramp metering, Caltrans will offer ramp metering information to Smart Corridors, allowing the local agencies to coordinate interchange traffic signal timing with the ramp metering rates to attempt to improve the efficiency of the traffic signals.

Caltrans would like to continue receiving incident information from CHP and others. Currently, this information is shared between Caltrans, CHP, and TravInfo®. As Caltrans receives this information, it will be made available to the Smart Corridor TMCs.

3.5 TravInfo®

TravInfo® currently receives or is planning to receive lane-by-lane vehicle data including volume, speed, and occupancy from Caltrans' loop stations. TravInfo® also interfaces with the CHP to receive incident data that is displayed on the TravInfo® website. Additional incident and construction data will be manually entered into the system as it becomes available.

TravInfo® also expects to interface with BART, MUNI, and AC Transit to publish arrival and departure times as well as static transit data such as routes, schedules, and fares.

As mentioned earlier, TravInfo® will begin receiving mid-block speeds and volumes in both directions from the East Bay Smart Corridor later this year. The data is being collected by nearly 60

microwave sensors along the smart corridor arterials. TravInfo® is interested in volume, speed and delay data for major arterials.

4 INTERIM CENTER-TO-CENTER FUNCTIONAL REQUIREMENTS

The interim C2C functions that will be part of this project fall under two major categories. The first category is exchange of real-time data and video. The second category is device control. This section identifies the high-level functional requirements for real-time exchange of data and video and controlling CCTV cameras, CMS, freeway ramp meters, traffic signals, and other devices when one agency system will control another agency's system's devices. This discussion of the functional requirements is consistent with the National ITS Architecture described in the following section.

It is important to develop C2C requirements that are fully compliant with National standards to be completely interoperable. NTCIP C2C Protocol Standards (i.e., DATEX-ASN, CORBA) as well as TMDD data set compliance is critical for transparent interoperability between regional TMCs and Smart Corridor programs.

It is relevant to note that the C2C requirements do not necessarily discuss physical TMCs. Instead, it is a concept for a group of systems interconnected to achieve the functionality of a single system.

4.1 Real-Time Data and Video Exchange

One of the major functions that will be provided by the C2C System is the exchange of traffic data and video between all the participating centers. The initial phase of the Bay Area's Interim C2C System will focus on the two-way exchange of information between the Regional TMC and each of the Smart Corridor TMCs. If additional software development is needed for exchange between Smart Corridors, it will occur in a later phase. The major functional requirements based on the National ITS Architecture will define how information collected by each system will be processed into a useful format for others, and how and what type of information will be distributed to other systems.

4.1.1 Data Collection Functions

Vehicle data is the most useful information for identifying congestion, speed, occupancy, and other traffic flow characteristics. To be useful, this data must be up-to-date and accurate. Caltrans collects vehicle volume, speed, and occupancy on a lane-by-lane basis for freeways. The data is collected every 30 seconds. The Smart Corridors will also be collecting vehicle data along the Smart Corridor arterials in a similar fashion. The system detector loops along the Smart Corridors measure traffic flow characteristics along the arterials to assist in evaluating traffic signal timing.

The CHP and local police are the primary source of incident information, which is displayed on the CHP website. Caltrans and I-580 Smart Corridor generate incident information using the vehicle data. The I-580 Smart Corridor currently uses data from fixed camera video images to evaluate traffic conditions. Other Smart Corridors do not currently generate incident information, but do have the ability to display and monitor incident data and response activities.

Caltrans and the Smart Corridors are also monitoring data from devices including CMS, ramp meters, and HAR. This information provides the status of each device, metering rates, and messages that are being displayed to drivers.

SV-ITS Program currently collects and distributes to all partner agencies traffic signal status information; loop volume, speed and occupancy data from freeway detectors; CMS information,

ramp meter information, and HAR, as well as incident information collected by individual agency systems.

The information is collected and distributed via NTCIP (DATEX-ASN) C2C protocols and is TMDD data format compliant.

The current Silicon Valley ITS implementation provides device control across TMC systems enabling multijurisdictional incident response plans to be implemented. This technical capability in concert with institutional and operational strategies allows for powerful regional traffic management and traveler information capabilities.

The Smart Corridors are collecting traffic signal timing coordination information in order to provide progression along the arterials. This information includes traffic signal phasing, cycle length, timing splits, and offsets.

4.1.2 Video Collection Functions

Caltrans and the Smart Corridors are currently receiving video at their TMCs. This video is full motion video that is fed back to a TMC for distribution onto a video wall and operator workstation.

4.2 Real-Time Data and Video Processing/Distribution Functions

All centers currently process the real-time data that they collect and internally display and analyze it. The C2C functionality should exhibit standard fully distributed, non-intrusive data exchange to mitigate any perceived security and lack of control concerns, which are foremost in regional management systems. The discussion below relates to the processing that is necessary for the various centers to be able to process their own information and share it with other TMCs.

4.2.1 Data Processing/Distribution Functions

Caltrans currently processes vehicle data and shares it with TravInfo®. TravInfo® is also receiving vehicle data collected by microwave detectors. TravInfo® evaluates the speeds presented in the vehicle data and displays the information on a color-coded map on the TravInfo® website to show freeway flows throughout the Bay Area. Incident information collected by the CHP is also displayed on the TravInfo® website. The Silicon Valley ITS Program is implementing an incident notification system that allows partner agencies to share incident information. This incident information, consistent with TMDD standards, will be shared with TravInfo® in a manner that shall be compliant with the NTCIP DATEX-ASN interface protocol.

4.2.2 Video Processing/Distribution Functions

The initial C2C functionality shall provide for Caltrans and the Smart Corridors to share video with each other. Caltrans currently distributes video images to local media stations at one frame per second. This information is available through the TravInfo® website.

4.2.3 Software Functional Requirements

The software functional requirements for C2C interface standards shall address the following as a minimum:

- NTCIP compliant protocols;
- TMDD data sets for interoperability;
- Non-intrusive fully distributed architecture;

- Secure network management capabilities; and
- Performance requirements.

NTCIP standards provide two alternative protocols for C2C communications. One protocol is built around DATEX-ASN and is a message-oriented protocol. The other protocol is built around CORBA and is an object-oriented protocol. Two standards are established to address the wide variety of system architectures found in ITS C2C communications. Those that are fully object-oriented easily implement the CORBA interface but cannot as easily implement the DATEX-ASN interface, and vice versa. The two protocols are functionally similar, although CORBA provides more services and DATEX-ASN is more bandwidth efficient (which is critical for real-time traffic and incident management). In addition, the current implementations of DATEX-based C2C networks allow for device control capabilities.

There have also been some discussions related to an XML system for data exchange. XML is not a current standard protocol but could be a solution in the future. XML is discussed in some detail in this section.

4.2.3.1 DATEX-ASN

DATEX-ASN (Data Exchange in Abstract Syntax Notation) is a traditional, structured messaging model. DATEX-ASN specifies a set of rules and procedures for the exchange of messages. ISO 8824 specifies the language used to define message structures, with the Basic Encoding Rules defined in ISO 8825. These rules and procedures define a set of concepts including session, subscription and publication. In some ways the form in which these concepts are defined and the interaction diagrams that are presented to support these concepts is very similar to the CORBA Notification service. For example, a request submitted by a client TMC is known as a subscription. The subscription may be new, an update or a cancellation. The subscription may be a periodic request or event driven. The subscription also indicates to whom the publication should be sent to either as a message or as a file.

The advantages of DATEX-ASN are it's simple approach and consistency with other messaging standards. DATEX-ASN includes minimal overhead, enabling a responsiveness that may be theoretically faster than other more complex messaging standards. This would support high volume data exchanges over links with limited bandwidth, such as traffic management systems. DATEX-ASN protocols are not object oriented; as a result, their implementation is more consistent with internal TMC legacy software. As a message passing protocol, it has been tested for up to 256 nodes with high volume data exchange. Current implementation in the Silicon Valley ITS system enables all ITS information to be available to all partner TMCs and is compliant with the NTCIP DATEX Standard. It provides the interoperability and seamless integration vision envisioned for regional C2C communications.

4.2.3.2 CORBA

The other NTCIP standard C2C protocol is built around CORBA (Common Object Request Broker Architecture) and is an object-oriented protocol. One of the most important elements in CORBA is the ORB (Object Request Broker), which enables a client program to request services from a server program or object without requiring knowledge of the server location in a distributed network. Requests and return replies to ORB's are implemented via the General Inter-ORB Protocol (GIOP) or Internet Inter-ORB Protocol (IIOP).

Advantages of this protocol include its scalability inherent in the object-oriented implementation. Object oriented design and CORBA are widely used throughout the Information Technology industry. Due to CORBA's widespread use, it may be easier to find experienced staff to implement

and maintain object-oriented applications versus message-based applications. CORBA is best suited to tightly integrated system interactions and/or large networks. Systems evoke processes or exchange data across multiple systems. Using the Trader and Naming discovery services, CORBA allows data to be collected from a large number of systems. New systems are brought into the network without requiring modifications to the current systems on the network.

Application of a CORBA interface is not sufficient, in itself, to meet the NTCIP standards. NTCIP CORBA defines how systems will utilize the standard CORBA features and functions. The NTCIP standard defines a CORBA application profile that defines which version of CORBA is to be used and the CORBA optional services, which must be present. The NTCIP standard further specifies certain naming conventions and how CORBA security services will function in a standards-based implementation. For real-time notification of data changes and events, NTCIP CORBA defines a mechanism based on CORBA's built-in Event Channel feature for posting and receiving real-time event notifications.

All C2C CORBA systems must have a published interface definition language (IDL) file. This file defines the information available for exchange between the various systems. The data contained within the IDL file should map to a specific version of the Traffic Management Data Dictionary (TMDD). This removes ambiguity by thoroughly defining the meaning of the exchanged data.

4.2.3.3 XML

Extensible Markup Language (XML) has been developed as an IT industry standard to address the problem of how structured text and data documents are to be interpreted across the Internet. XML is a standard of the World Wide Web Consortium (W3C).

Although not an NTCIP standard at this time, some transportation agencies are starting to use Internet protocols built around the XML for some center-to-center communications. This approach makes maximum use of off-the-shelf software and broader Internet standards. Not all the components needed for a fully functional ITS center-to-center interface have been standardized or defined in a consensus profile yet. Initial implementations are not interoperable. The NTCIP center-to-center Working Group is investigating needs and opportunities for a standard transportation communications profile based on XML related Internet protocols.

SAE J2630 is a new standard in development that defines mapping of messages defined in ASN.1 to an XML format. This standard will help facilitate translation of messages between XML and the existing NTCIP center-to-center standards.

XML offers potential advantages in situations where simple, repeated one-way transfer of the same data is all that is required. For example, it is being used for transfer of routine data to information service providers for use in traveler information systems. However, functionality and standards in this area have not progressed far enough to recommend this approach as a general-purpose center-to-center communications solution. It is suitable for specific data transfers that need not support all the functionality of a general-purpose center-to-center interface.

4.2.3.4 Functional Requirements

Caltrans is planning to standardize on a CORBA system, while the Smart Corridors have standardized on various DATEX systems. TravInfo® is also a DATEX system but has some customization such that it is not identical to any of the Smart Corridor systems. Mutually agreed modifications are necessary for data exchange between the TravInfo® DATEX system and the Smart Corridor DATEX systems.

4.2.4 Hardware Functional Requirements

Hardware will need to be added to the existing systems in order to develop the physical connections between each center. Caltrans has standardized on utilizing a SONET OC-48 network with some use of Ethernet, while others are using their Data Exchange Network or Ethernet over fiber to transmit and receive information. Communications equipment will need to be installed at each TMC to facilitate the C2C functional requirements described in this report.

4.3 Device Control Functional Requirements

This functionality focuses on the ability for one center to control a device owned by another center. This is a very sensitive function since there are many issues related to when, how, and how much one center should be able to control devices owned by another system. The discussion below focuses on device control during typical operations (peak or daytime periods) and night time operations.

4.3.1 Typical Operations

During typical operations, which include morning and evening peak periods and possibly special events, the Smart Corridor TMCs and the Regional TMC are staffed or have individuals that are responsible for periodic monitoring of the system. In these situations, the owning center should have first priority to view and control its CCTV cameras and other devices. Other centers should be allowed to view real-time video from all cameras.

If a particular camera is not in use by the owning center, another center should be allowed to have some degree of control of that camera. This may be limited to fixed presets, allowing the other centers to select a desired view. This restricts full PTZ capabilities but allows useful video to be available. The owning agency should have the ability to regain control of a camera at any time through a function of their own system, as well as being able to restrict any video from being seen by another center, if a sensitive situation arises.

For other devices like CMS, HAR, ramp meters, and traffic signals, operational sharing should be available. There are instances when an event on an arterial will have traffic impacts on the freeway, and vice versa. There may be specific messages or controls that can be implemented by another agency to achieve an improvement to traffic flow. The current design of the Silicon Valley ITS Program makes it capable of cross jurisdictional device control based on a subscribe and publish methodology. Direct control requests are from TMC to TMC. This supports agency autonomy and provides independent control of field devices. Interoperability is achieved via compliance with the NTCIP C2C standards.

4.3.2 Nighttime Operations

The Regional TMC is the only TMC that operates 24 hours a day, 7 days a week. All Smart Corridor TMCs function only during typical daytime operations. During nighttime operations, the C2C System may wish to enable the Regional TMC to monitor or control elements of the Smart Corridor devices when a situation arises based on future agreements between the agencies.

The Regional TMC may wish to allow the Smart Corridor TMCs to gain control of Caltrans District 4 devices in the event that the Regional TMC is not operational, when applicable based on future agreements.

4.4 Functional Requirements Summary

The high-level functional requirements were derived from input provided by Caltrans, TravInfo®, and each Smart Corridor lead agency. The functions summarized below, along with the corresponding Architecture Flows defined by the National ITS Architecture, meet or exceed the minimum requirements of each partner.

Summary of C2C Functional Requirements

Device/Function	C2C Functional Requirements	National ITS Architecture Flow(s)
Video	Send and receive full motion, real-time video	traffic images
Camera Control	Send and receive camera control data when owner is not using	video surveillance control
Vehicle Data	Send and receive lane-by-lane volume, speed and occupancy data	traffic information coordination road network conditions request for road network conditions
Incident Data	Send and receive incident location, severity and expected duration	traffic information coordination
Ramp Meters	Send and receive metering rates	traffic control coordination freeway control status
CMS	Send and receive messages being displayed and requests for messages	traffic control coordination roadway information system status roadway information system data
HAR	Send and receive messages being broadcast and requests for messages	broadcast advisory roadway information system status roadway information system data
Traffic Signals	Send and receive traffic signal timing data (cycle, split, offset, phasing, pattern number) and commands	traffic control coordination traffic information coordination

5 NATIONAL ITS ARCHITECTURE STANDARDS

To better outline the specific C2C functional requirements that pertain to this project, it is first desirable to point out some of the National ITS Architecture components that pertain to this project.

The National ITS Architecture creates the opportunity for interoperability across diverse ITS deployments while preserving choice and flexibility for the specific ITS implementers. The architecture is designed to achieve benefits of ITS in three principle ways: (1) adaptation or development of consensus standards for transportation products based upon architecture requirements; (2) development of regional architectures which are compatible with the national architecture and tailor it to support integrated regional ITS solutions; and (3) incremental deployment of architecture compatible systems.

To successfully accomplish these efforts, there are general architecture guidelines that the National Architecture effort establishes. These guidelines will be followed by the C2C efforts. The Architecture Framework shall:

- Support reliable, accurate, and seamless delivery of user services;
- Provide interoperability between different services and service providers;
- Provide service continuity between different device providers;
- Support information collection, processing, management, coordination, and distribution across multiple transportation services;
- Provide for information access controls;
- Accommodate existing transportation technologies and infrastructures;
- Support growth, flexibility, and expansion;
- Recognize and build upon existing institutional arrangements;
- Support interface with relevant, non-ITS systems;
- Facilitate transition between development, operational test, early deployments, and full-scale deployment; and
- Promote interchangeability of components from multiple vendors.

The National Architecture has identified four classes that share basic functional, deployment, and institutional characteristics. Within these four classes, the National Architecture further defines ITS as nineteen interconnected subsystems. Through the Market Package (set of subsystems) selection process, subsystems and interfaces were identified that the C2C architecture should accommodate. The figure below shows the relevant classes to this project. Each class has numerous Market Packages that will be identified below.

Center-to-Center Communications

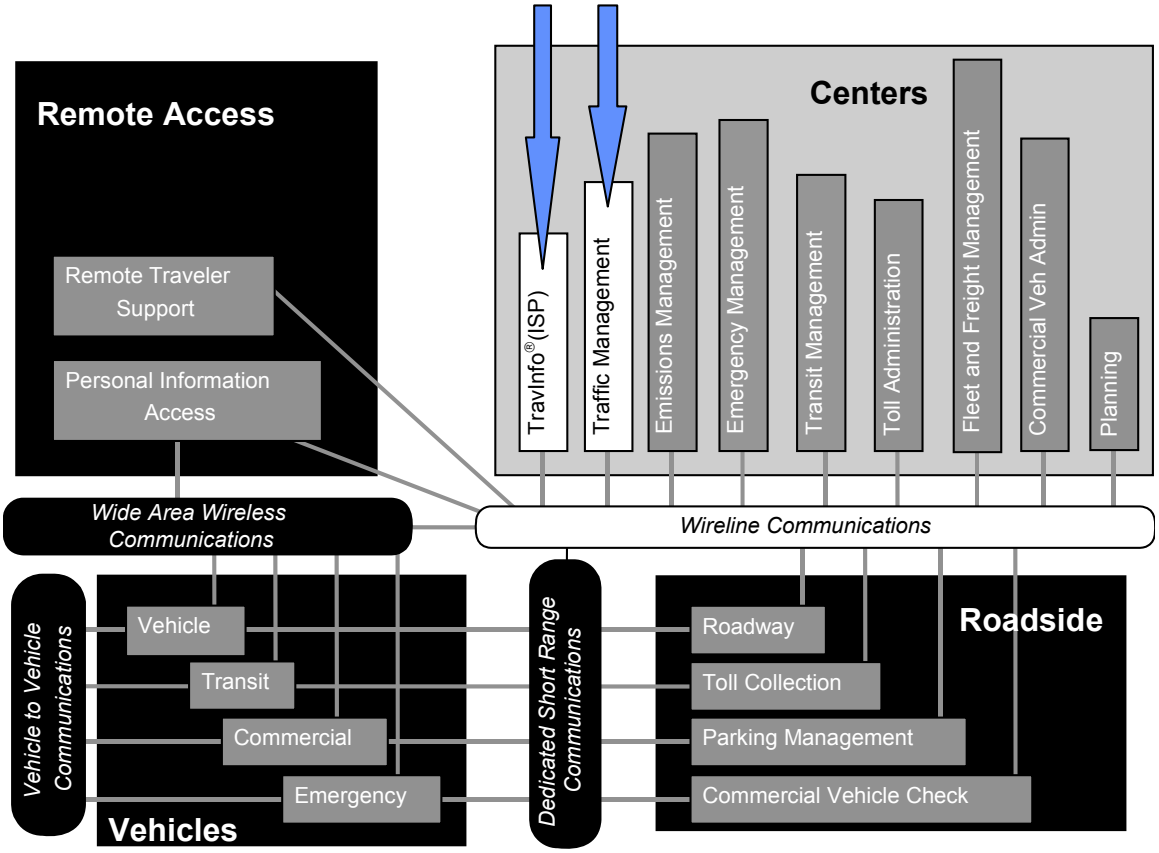

The C2C architecture focuses on the integration between TravInfo® (Information Service Providers) and Traffic Management Centers. The communication mechanism is through existing wireline communications or other viable means. As the Bay Area Regional Systems continue to evolve beyond the interim system, field elements from the Roadside, Vehicles, and Remote Access classes, as well as Emergency Management, Transit Management, Toll Administration, Commercial Vehicle Operations can map into the existing architecture, thereby resulting in compliance with National Architecture deployment.

The following are the two components of the current system for the C2C effort.

5.1 Advanced Traveler Information System

The ATIS system for the Bay Area is through TravInfo®, managed by MTC. The following diagram depicts the ATIS Broadcast Traveler Information showing the data flows between TravInfo® (ISP) and Traffic Management Centers, as well as other ISP data flows.

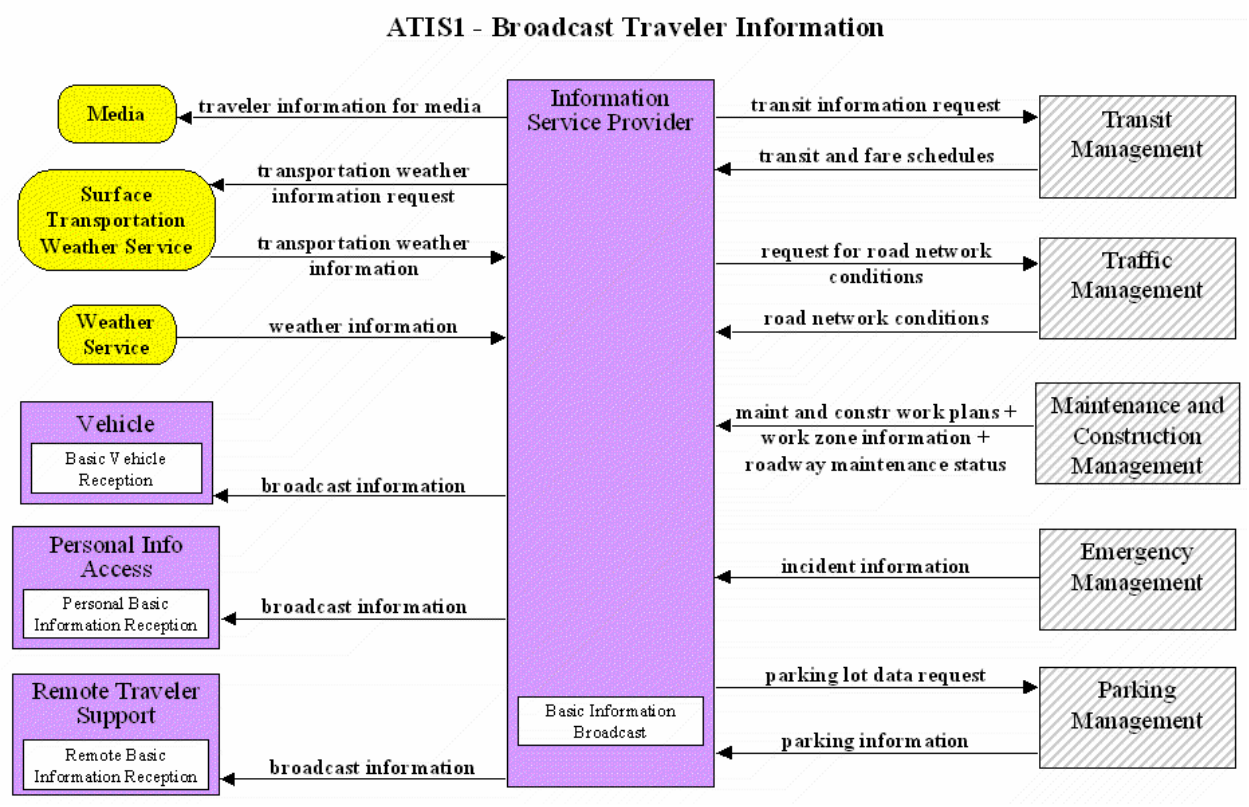

This market package collects traffic conditions, advisories, general public transportation, toll and parking information, incident information, air quality and weather information, and broadly disseminates this information through existing infrastructures and low cost user equipment (e.g., FM subcarrier, cellular data broadcast). The information may be provided directly to travelers or provided to merchants and other traveler service providers so that they can better inform their customers of travel conditions. Different from the market package ATMS 6 – Traffic Information Dissemination, which provides localized HAR and CMS information capabilities, ATIS 1 provides a wide area digital broadcast service. Successful deployment of this market package relies on availability of real-time traveler information from roadway instrumentation, probe vehicles or other sources. The data flows critical to C2C communications are the **Request for Road Network Conditions** and **Road Network Conditions** between the TMC and an ISP (which in the case of this project would be TravInfo®).

Request for Road Network Conditions includes requests for traffic information, road conditions, surface weather conditions, incident information, and other road network status. The request specifies the region/route of interest, the desired effective time period, and other parameters that allow preparation of a tailored response. The request can be a subscription that initiates as-needed information updates as well as a one-time request for information.

Road Network Conditions includes current and forecasted traffic information, road and weather conditions, incident information, and other road network status. Raw data, processed data, or some combination of both may be provided by this architecture flow.

5.2 Advanced Traffic Management System

The ATMS for the Bay Area is made up of two components. The central component of the ATMS is through the Regional TMC. The other component of the ATMS is accomplished through three major Smart Corridors. The following diagram depicts the ATMS Regional Traffic Control showing the data flows between the Regional TMC and the Other Traffic Management Centers (Smart Corridors) as well as other data flows.

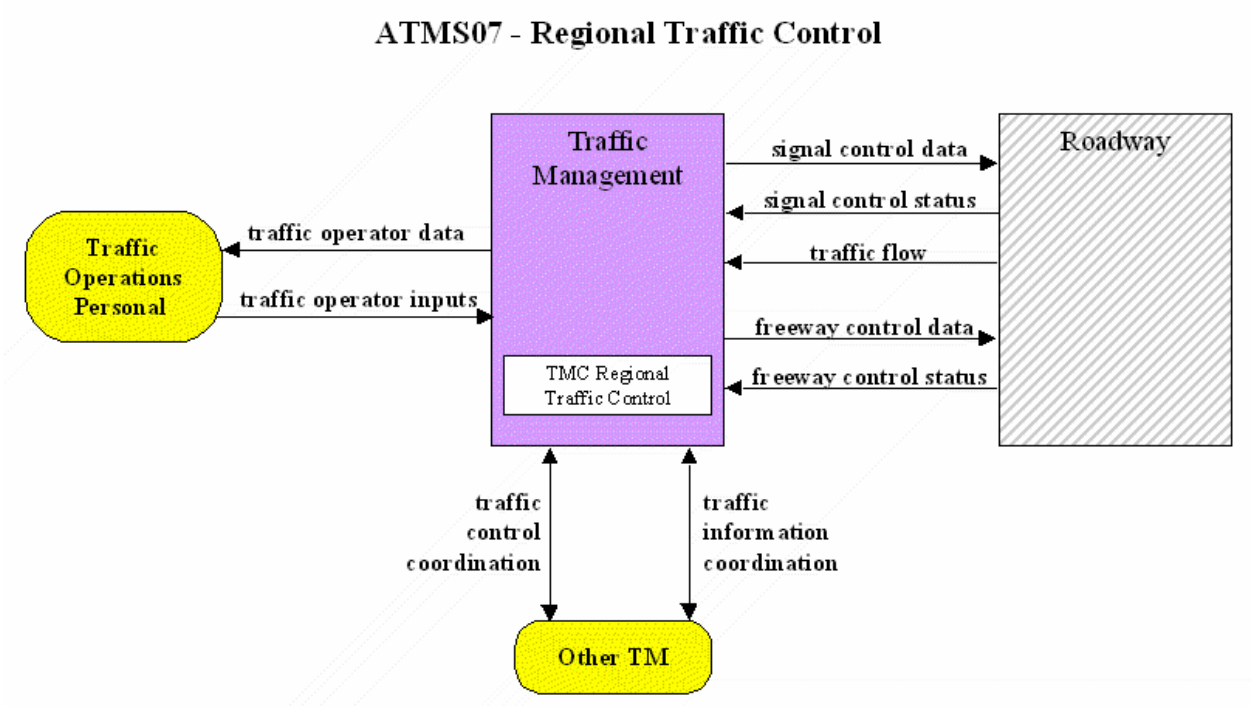

This market package (set of subsystems) provides for the sharing of traffic information and control among traffic management centers to support a regional control strategy. This market package advances Surface Street Control and Freeway Control by adding the communications links and integrated control strategies that enable integrated interjurisdictional traffic control. The nature of optimization and extent of information and control sharing is determined through working arrangements between jurisdictions. This package relies principally on roadside instrumentation supported by Surface Street Control and Freeway Control and adds hardware, software, and wireline communications capabilities to implement traffic management strategies that are coordinated between allied traffic management centers. Several levels of coordination are supported from sharing of information through sharing of control between traffic management centers. **Traffic Control Coordination** and **Traffic Information Coordination** are the key components for C2C communications.

Traffic Control Coordination includes information transfers that enable remote monitoring and control of traffic management devices. This flow is intended to allow cooperative access to, and control of, field equipment during incidents and special events and during day-to-day operations. This flow also allows 24-hour centers to monitor and control assets of other centers during off-

hours, allows system redundancies and fail-over capabilities to be established, and otherwise enables integrated traffic control strategies in a region.

Traffic Information Coordination is information exchanged between TMCs and typically includes incidents, congestion data, traffic data, signal timing plans, and real-time signal control information.

6 BANDWIDTH ANALYSIS SUMMARY

A bandwidth analysis was conducted in the *Communications Alternatives Report* to estimate the total bandwidth requirements of a fully built-out regional system. The summary shown below is taken from the previous effort and is based on the assumption that the C2C system will operate over a fiber optic network that is shared with the Caltrans C2F system. In other words, the Caltrans C2F network will be communicating over the same BART fibers as the proposed C2C System. The bandwidth analysis reviews the requirements for the C2F system and the C2C communications between the Regional TMC and each Smart Corridor TMC (represented by the "Interjurisdictional Interfaces"). The following discussion that precedes the summary table is the basis of assumptions that were made in assessing the required capacity.

A total of 800 Caltrans-owned CCTV installations are planned for the MTC project area. But sharing all 800 video feeds is impractical. Only a fraction of all video images can be viewed simultaneously at the TMC, since a limited number of monitors are available.

At a maximum, Caltrans will have up to 50 simultaneous video images displayed within their system. In addition, CHP will receive up to 20 separate simultaneous feeds to be displayed within their system. It is estimated that up to 108 additional local agencies may desire the ability to view up to two Caltrans video feeds. This totals 286 individual feeds that should be planned for in the full build-out of video sharing requirements to provide high bandwidth images to each agency.

Other quantities shown in the table below are estimates provided by Caltrans or TravInfo®. Reference. See the *Communications Alternatives Report* for additional assumptions made on the quantities and number of circuits.

Summary of Bandwidth Requirements

Description	Total Quantity	Elements per Circuit	Bandwidth per Circuit	Total Required Bandwidth
Caltrans				
CCTV				
Low-Bandwidth (security cameras) (V_L)	250	1	128 kbps	32,000 kbps
High-Bandwidth (V_H)	286	1	1544 kbps	441,584 kbps
CMS (D_L)	170	3	19.2 kbps	1,088 kbps
HAR (4*D_L)	55	1	56 kbps	3,080 kbps
Ramp Meters (D_L)	1040	4	19.2 kbps	4,992 kbps
Detector Stations (D_L)	1500	2	19.2 kbps	14,400 kbps
RWIS (D_L)	1	1	56 kbps	56 kbps
EMS (D_L)	300	1	19.2 kbps	5,760 kbps

Call Boxes				
Call Box Locations (D_L)	3495	350*	56 kbps	560 kbps
TravInfo®				
Toll Tag Readers (D_L)	250	1	19.2 kbps	4,800 kbps
Other				
Interjurisdictional Interfaces	1	1	100,000 kbps	100,000 kbps
			Total	**608,320 kbps**

Notes:
V_L – Low quality video
V_H – High quality video
D_L – Low speed data
D_H – High speed data
*—The communication system will deliver call box calls to the CHP Golden Gate Division Headquarters. At this time, it is proposed that all call boxes would share 10 voice circuits.

The table above shows that the regional freeway operations communications network should be designed to support a bandwidth of just over 600 Mbps, which is comparable to an OC-12 network (622 Mbps). This table represents a maximum bandwidth requirement that would be realized at the TMC under full operation. If a SONET technology and architecture were selected, this would also represent the size of the necessary SONET ring. If some form of Ethernet were selected, the bandwidth of each link would vary depending on how data is routed through the network, and would probably be lower than 600 Mbps.

7 COMMUNICATIONS NETWORK EVALUATION

In evaluating the C2C system to develop recommendations for implementation, there are three major components that need to be considered. The first consideration is the use of a peer-to-peer system. The next consideration is the use of leased line communications and agency-owned fiber optic lines for communications, and an analysis of the reasons for using these different mediums. The third consideration is the communications format to be used. A combination of SONET and Ethernet will be evaluated in this section.

7.1 Physical Peer-to-Peer Network Architecture

In a peer-to-peer architecture, computers communicate directly among themselves. The model is based on the sharing of computer resources and services by direct exchange between systems. These resources and services may include the exchange of information, exchange of near real-time data, processing cycles, and disk storage for files. The term "peer-to-peer" is applied to networks that expect end users to contribute their own files, computing time, or other resources to some shared project. Peer-to-peer architecture allows for decentralized application design. In a fully decentralized system, every host is an equal participant and there are no hosts with special facilitating or administrative roles.

Peer-to-peer architecture allows for decentralized application design that has both pros and cons. Peer-to-peer computing can help agencies deliver services and capabilities more efficiently across diverse geographical boundaries. Each agency will function independent of the others. Each peer's application will continue to function, regardless of system failure at other peers. A fully decentralized peer-to-peer architecture is ideal for data exchange and non-changing environments, where the exchange rules are set and each peer's sensitive data is protected either by firewall or does not reside on the peer-to-peer connection.

In practice, building a fully decentralized system can be difficult, and many peer-to-peer applications take a hybrid approach. Many of the current peer-to-peer applications present a decentralized face while relying on a central facilitator to coordinate operations. Another approach to the control issue is use of intelligent agents that allows computing peer-to-peer networks to dynamically work together. Agents reside on peer computers and communicate various kinds of information back and forth. Agents may also initiate tasks on behalf of other peer systems. For example, intelligent agents can be used to prioritize tasks on a network, change traffic flow, search for files locally and detect viruses before they can cause serious damage. There are many systems that are peer-to-peer at the core but have some semi-centralized organization, such as Internet applications in instant messaging. The figure below illustrates peer-to-peer network.

Another alternative for operating as a peer-to-peer network without a hybrid approach is to develop a user interface application that could reside on each peer system. This application would allow for video and data to be exchanged between peers without impacting the peer network integrity. The disadvantage is that additional development would be necessary to interface the local peer network with common interface with the user interface application.

BASIC PEER-TO-PEER NETWORK

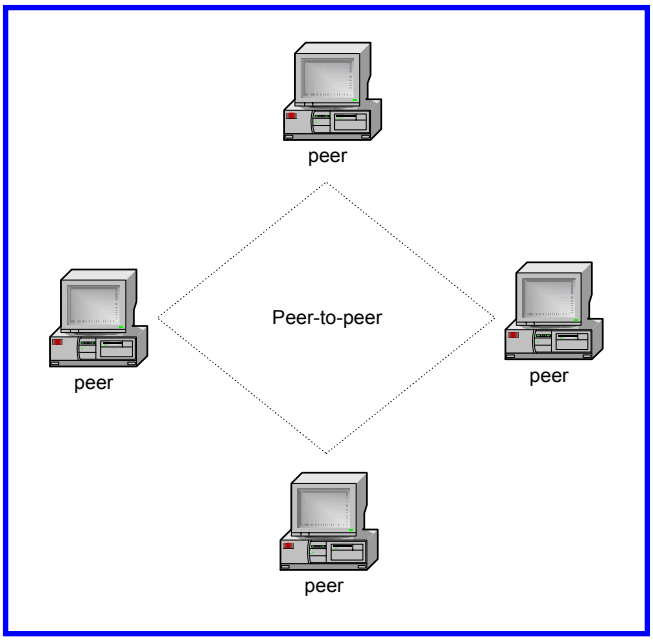

7.1.1 Recommended Peer-to-Peer Network

A peer-to-peer network is the recommended framework for the Interim C2C system, with a user interface application that may reside on the Regional TMC and Smart Corridor systems. This application would process and route data from a local system to another TMC. In this scenario, no TMC would be "above" another TMC in a hierarchy. Instead, all systems would operate at the same level and share video and data between systems.

7.2 Communications Medium Alternatives

Several forms of communications have been previously evaluated to serve different functions of the system. The discussion of those communications mediums below focuses on the development of C2C communications with the evaluation directed toward connecting the Regional TMC with the three Smart Corridors.

7.2.1 Leased Line

Using leased lines for communications is a quick and economical short-term solution for developing a communications network. Installation costs are kept to a minimum since a telecommunications provider owns the infrastructure. Communications equipment is typically kept up-to-date as the technology advances. The downside to leased line communications is that there is a recurring cost for the leased service. Another downside is that the telecommunications industry may not always be reliable in the changing economy. Leased line communications can be a good alternative for a short-term solution, but the leasing costs can offset construction costs of an agency owned infrastructure if considered a permanent solution.

7.2.2 BART Fiber

Caltrans has been authorized to use four fiber optic strands within the BART cables. The following stations have been designated as access points to the BART fiber for Caltrans purposes:

- Bay Fair Station
- Colma Station
- Glen Park Station
- San Leandro Station
- Civic Center Station
- El Cerrito del Norte Station
- Walnut Creek Station (existing hub)
- Fremont Station
- Pittsburg/Bay Point Station
- Near 19th Street Station
- West Dublin/Pleasanton Access Point
- Dublin/Pleasanton Station
- Richmond Station

The schematic in Section 10.4.4 of this document details the BART access points that will require fiber splicing to develop the communications backbone.

The access points are in the vicinity of these stations, not within the stations. In some cases, branch cable has already been installed from the train control rooms at the stations to a cabinet or pull box in the Caltrans right-of-way. At this time, Caltrans has only accessed the BART fiber at the Walnut Creek Station and near the 19th Street Station and have installed a SONET OC-48 hub in Walnut Creek and at Caltrans. In order to develop a C2C network that creates a communications ring using

the BART fiber, additional access will need to be made at the Civic Center Station (for SF*go*), Fremont Station (currently under construction for Silicon Valley ITS), Dublin/Pleasanton Station (for I-580 Smart Corridor), and Bay Fair Station (to complete communications ring).

Utilizing BART fiber is beneficial since there are relatively minor construction costs (installing fiber and equipment to interface with BART fiber) and the fiber maintenance costs are handled by BART, which owns the fiber. There are also no recurring monthly leasing costs. The downside to using the Caltrans OC-48 network over the BART fiber is the finite bandwidth capacity due to the existing OC-48 network. However, the bandwidth analysis presented earlier indicates that there should be adequate bandwidth capacity to accommodate the full build-out needs for the Caltrans C2F network and C2C communications. If the OC-48 network becomes restricting in the future, the SONET equipment could be upgraded to an OC-96 network or other higher speed communications network. BART has also indicated that additional fibers may be available for leasing if more fibers are needed at some point in the future.

Due to the layout of the BART fiber network and the availability of other agency-owned fiber optic cable, the proposed network for the interim C2C System will be a folded ring. Creating a folded ring with the four fibers essentially means that two fibers are traveling around the entire network and at any given location, the two fibers traveling toward a TMC share the cable or conduit with the two fibers traveling away from the same TMC. Therefore, the fiber capacity of the folded communications ring is two fibers. As future communications networks are developed in the Bay Area, there is a plan to utilize different fiber paths in order to develop an unfolded ring in which each redundant fiber path is in a separate conduit path.

7.2.2.1 Policies of BART Fiber Use

BART has dedicated four fibers to be used for Caltrans purposes. Access to the BART fibers within BART right-of-way must be coordinated with a BART representative. Access fees may be incurred for any work required within BART right-of-way.

7.2.3 Agency-Owned Fiber Infrastructure

Another option is to develop a network of agency-owned fiber optic cable. Since a network of agency-owned cable does not currently exist, this would be a very costly endeavor. Constructing this infrastructure would entail installation of conduit, possibly some right-of-way acquisition, as well as the cable installation through most of the proposed network. The benefits of this alternative are that an agency would have no recurring leasing costs and no restrictions on the use of fiber.

7.2.4 Network Security

It may be appropriate to consider implementing security policies and firewalls when creating this regional network, especially since the TravInfo® component is connected to the Internet. This would help protect the system against outside users or other disturbance to the system via a remote user. This security could be accomplished through a physical separation in equipment, or a logical separation in the software. It is recommended that the security policies that are used when connecting to the regional network be addressed through an MOU.

7.2.5 Recommended Communications Medium

Caltrans is already utilizing the BART fibers by developing an Ethernet over SONET fiber backbone between Caltrans District 4 and the Walnut Creek hub. There are many valid reasons for extending this BART fiber backbone to serve the Smart Corridors that choose to use it. In fact, two Smart Corridors have already designed and are in the process of making connections to the BART fiber backbone. This SONET ring over BART fiber can be extended to the Smart Corridor TMCs by

making minor fiber modifications and minimal fiber installation such that the Regional TMC and the Smart Corridor TMCs can be on the same fiber network.

Access to the interim C2C system does not necessarily require a fiber optic backbone. Connections to the Regional TMC, or between Smart Corridor TMCs in the future, can be achieved through any form of communications medium. Leased lines have already been proven a successful medium, and wireless technology could also be considered.

7.3 Communication Alternatives

SONET and Ethernet are the two primary forms of communications that have been previously considered for developing the C2C communications backbone. A combination of the two is being used as a standard communications methodology by Caltrans and these two technologies are discussed in the recommendations below.

7.3.1 SONET

SONET is an open standard for communicating digitally over fiber optics. It was developed in the 1980s and enhanced in the 1990s by the telephone industry so that fiber optic communication equipment could be purchased from multiple vendors without compatibility issues (although this is not completely true). Even though the intent of SONET is to be interoperable with different manufacturers, the existing Cisco SONET equipment in use by Caltrans is proprietary and is not compatible with other manufacturers' equipment. Future SONET hubs will need to be purchased from Cisco.

SONET is the U.S. standard for synchronous data transmission on a fiber optic medium. The international equivalent of SONET is synchronous digital hierarchy. Together, they provide standards allowing digital networks to be interconnected and allowing existing conventional transmission systems to take advantage of fiber optic communication media through tributary attachments. Unlike other networking standards that are changing moderately over time, the comprehensive SONET standard is expected to provide the transport infrastructure for worldwide telecommunications for at least the next two or three decades.

7.3.2 Gigabit Ethernet

Ethernet (IEEE 802.3) is the most widely used packet-based Local Area Network (LAN) standard. Gigabit Ethernet is just one step in the history of Ethernet-based communications.

Ethernet has been in existence since 1973 and the IEEE 802.3 standard of 1982 has been adopted by numerous national and international standards bodies. Ethernet began to dominate LAN markets after 1990 when IEEE adopted 10Base-T that provided 10 Mbps of Ethernet bandwidth over unshielded twisted-wire pair. In 1995, 100Base-T (FAST Ethernet) became an official standard offering 100 Mbps of bandwidth. In order to protect the investment of the existing 10Base-T infrastructures and to provide a migration path for 100Base-T, 10/100 auto-sensing Ethernet products were developed. These products provided the ability to deploy new computers and network equipment with the 100 Mbps Ethernet while still being able to communicate with existing equipment at 10 Mbps Ethernet.

Many LANs in existence today are predominantly using 100Base-T devices with some non-bandwidth intensive applications running on older personal computers (PCs) that are still equipped with 10Base-T network cards. Although 100Base-T has captured the market for servers and PCs within the LANs, it does not provide enough bandwidth capacity for typical large-scale backbone/WAN needs, on the order of combined C2C and C2F systems as the proposed Bay Area system. The 1000Base-T (Gigabit Ethernet) standard (802.3z) was ratified by the IEEE 802.3

Committee in 1998. Currently 10 Gigabit Ethernet (10,000 Mbps) is an approved standard in the IEEE 802.3ae supplement to the Ethernet standard. An IEEE working group has been established to develop a new standard (IEEE 802.17) for resilient packet ring (RPR) access protocol. The new standard is expected to include support for dual counter rotating ring topology and protection switching in less than 50 ms to match existing provider-based network characteristics. Although there is a lot of standards work underway, RPR is not currently fully standardized so product offerings are vendor proprietary.

Gigabit Ethernet has gained momentum as the backbone technology of choice due to the typical lower cost that is historically associated with Ethernet and the availability of products that support long distance communications on fiber optic cable.

7.3.3 Gigabit Ethernet over SONET

Gigabit Ethernet can run as a layer on top of a SONET transport for communicating over a fiber optic medium. This allows some of the SONET bandwidth to be used for interconnecting Ethernet nodes while the remaining SONET bandwidth is used for high quality C2F video transmission equipment and serial communications with field controllers. The transmission of digital video over Ethernet alone has become feasible due to the progression of digital video standards; however, this new equipment is designed to operate in an environmentally controlled setting.

Caltrans has already established a Gigabit Ethernet over SONET system between the Caltrans District 4 TMC and the Walnut Creek hub.

7.3.4 Recommended Communications

Caltrans has already developed a Gigabit Ethernet network over a SONET fiber backbone between Caltrans District 4 and the Walnut Creek hub using existing BART fibers. Although there are some relevant benefits to using only SONET or Gigabit Ethernet, Gigabit Ethernet over SONET already exists within Caltrans. An advantage with SONET is having more flexible interfaces that can accommodate both Ethernet traffic and using channel banks to handle the low speed serial data. For maintenance and ease of configuration, it is recommended that the existing communications backbone of Gigabit Ethernet over SONET be expanded to tie in the three Smart Corridor TMCs. Two of the TMCs will be connected by fiber during 2003.

8 CONSTRUCTION REQUIREMENTS

8.1 Hardware Requirements

In addition to the software requirements defined in Section 9, fieldwork including hardware installation and fiber splicing are necessary to complete the Interim C2C System. A depiction of the fieldwork and hardware needed for the Interim C2C System is shown on the following page. The Contractor will be responsible for system integration and end-to-end testing. The definition of required hardware for each participant in the Interim C2C System will be developed per the requirements of Section 9.1, below, and will clearly define any required hardware that is not currently available or included in the future plans of each participant.

8.1.1 Silicon Valley ITS

8.1.1.1 SONET Node

The Silicon Valley ITS will communicate with the Regional TMC via agency-owned fiber along the BART system, and between the Fremont BART Station and the Silicon Valley ITS TMC in San Jose. This shall be achieved over a fiber optic ring topology using a SONET OC-48 platform to be furnished by the Silicon Valley ITS program. The Contractor shall install and configure the SONET node to process the video and data to accommodate the functions identified in this Scope of Work.

8.1.1.2 Ethernet T1 Router

The Contractor shall install an Ethernet T1 router at the Silicon Valley TMC in San Jose. The router shall accommodate sending and receiving data and video between the Regional TMC and the Silicon Valley TMC.

8.1.1.3 IP Encoder

The Contractor shall install an IP encoder at the Silicon Valley TMC. This encoder shall process video received from the Regional TMC and route the data to the Silicon Valley ITS DEN, and vice versa.

8.1.2 I-580 Smart Corridor

Completion of the connection between the I-580 Smart Corridor and the Regional TMC entails installation of approximately one-half mile of fiber and a SONET hub. The I-580 Smart Corridor may communicate with the Regional TMC via leased T1 lines until a fiber connection is made in the future. During development of the Interface Control Document, the Contractor will work with the I-580 Smart Corridor to define when and how the smart corridor communications will be established.

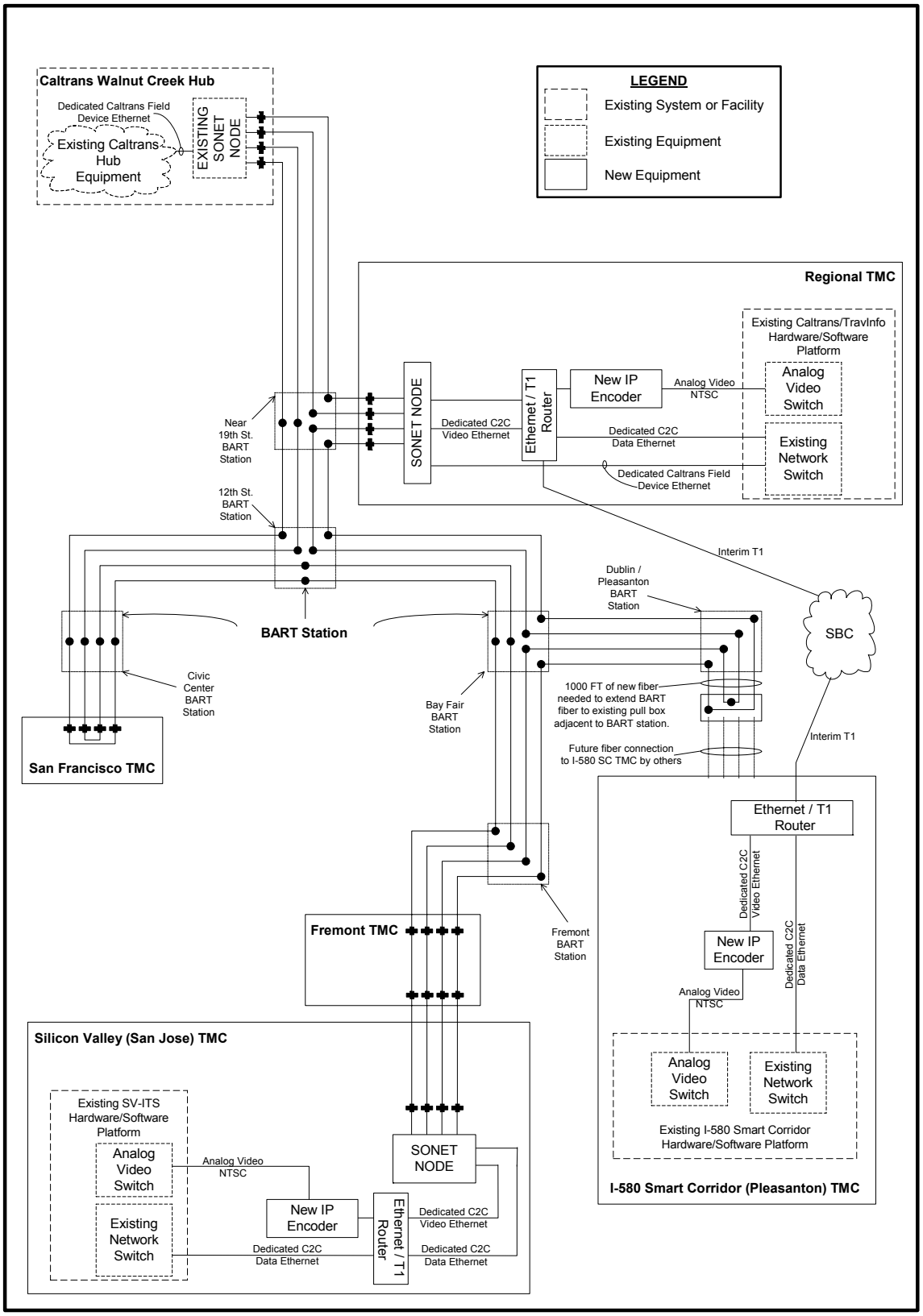
Caltrans Walnut Creek Hub
Dedicated Caltrans Field Device Ethernet
Existing Caltrans Hub Equipment
EXISTING SONET NODE
LEGEND
Existing System or Facility
Existing Equipment
New Equipment
Regional TMC
Existing Caltrans/TravInfo Hardware/Software Platform
Analog Video Switch
Existing Network Switch
New IP Encoder
Analog Video NTSC
Ethernet / T1 Router
SONET NODE
Dedicated C2C Video Ethernet
Dedicated C2C Data Ethernet
Dedicated Caltrans Field Device Ethernet
Near 19th St. BART Station
12th St. BART Station
BART Station
Interim T1
SBC
Dublin / Pleasanton BART Station
Civic Center BART Station
Bay Fair BART Station
1000 FT of new fiber needed to extend BART fiber to existing pull box adjacent to BART station.
Future fiber connection to I-580 SC TMC by others
San Francisco TMC
Fremont TMC
Fremont BART Station
Ethernet / T1 Router
Dedicated C2C Video Ethernet
Dedicated C2C Data Ethernet
New IP Encoder
Analog Video NTSC
Analog Video Switch
Existing Network Switch
Existing I-580 Smart Corridor Hardware/Software Platform
I-580 Smart Corridor (Pleasanton) TMC
Silicon Valley (San Jose) TMC
Existing SV-ITS Hardware/Software Platform
Analog Video Switch
Existing Network Switch
Analog Video NTSC
New IP Encoder
SONET NODE
Ethernet / T1 Router
Dedicated C2C Video Ethernet
Dedicated C2C Data Ethernet
Dedicated C2C Data Ethernet

8.1.3 SFgo

The initial phase of SFgo will come on-line during FY 2003/04. The fiber optic connection from the SFgo TMC to the BART fibers will be completed during 2003. The Contractor shall work with SFgo to define responsibilities for the hardware required to implement C2C communications.

8.1.4 Regional TMC

The Contractor shall furnish and install an Ethernet T1 router at the Regional TMC in Oakland. The router shall accommodate sending and receiving data and video between the Regional TMC and the Smart Corridor TMCs.

8.1.4.1 Ethernet T1 Router

The Contractor shall furnish and install an Ethernet T1 router at the Regional TMC in Oakland. The router shall accommodate sending and receiving data and video between the Regional TMC and the Smart Corridor TMCs.

8.1.4.2 IP Encoder

The Contractor shall furnish and install an IP encoder at the Regional TMC. This encoder shall process video received from the Regional TMC and route the data to the Smart Corridor TMCs, and vice versa.

8.2 Fiber Splice Requirements

The Contractor is required to coordinate with BART to perform several fiber splices throughout the BART fiber network in order to complete the C2C system communications ring. The splice locations are shown in the schematic on the previous page, indicated by a dot. Fiber splices are required at the following locations:

- Interstate 980 just north of the bore near the 19th Street Station in Oakland – Splice fibers to create a communication link from the Regional TMC to the south along the BART line to the Smart Corridor TMCs;
- Near the 12th Street BART Station in Oakland – Splice fibers to create the communication paths as shown;
- Bay Fair BART Station – Splice fibers to create the communication paths as shown;
- Dublin/Pleasanton BART Station – Splice fibers to create the communication path as shown; and
- Just outside the Dublin/Pleasanton BART Station – Splice fibers to create the communication path as shown.

Fiber terminations and patch panels shall be furnished and installed at the following locations:

- Near the Regional TMC SONET hub for the communication link between the Regional TMC and the Smart Corridor TMCs;
- At the Fremont TMC to repeat the fiber signal between the Regional TMC and the Silicon Valley TMC; and
- At the Silicon Valley TMC near the SONET hub to provide communications between the Regional TMC and the Silicon Valley TMC.

Near the I-580 Smart Corridor BART connection, the Contractor shall furnish and install a 24-strand single mode fiber optic cable in existing conduit. Splices shall be done as described above.

9 SCOPE OF WORK

The Contractor shall provide the functionality identified below through software development efforts and an Interface Control Document to achieve peer-to-peer communications amongst the Regional TMC and the participating Smart Corridors.

The intent of this effort is to provide the mechanism to share video, sensor data, and incident data amongst the Regional TMC and the Smart Corridors by creating a common interface. This ICD will also help to establish the requirements for future systems that wish to be part of the Interim C2C System.

9.1 General Software Requirements

Prior to implementing the C2C software, the contractor will submit a complete set of prototype user-interface screens for approval by the MTC. The prototypes shall address all of the functionality described in the scope of services.

The contractor shall supply the following documents as part of this project:

- Concept of Operations Report
- Detailed Definition of Interfaces
- Interface Control Document
- Configuration Management Plan
- Software Design Document
- Detailed Functional Requirements
- Acceptance Test Plan
- Operator's Manual
- User-interface Installation CD

9.1.1 Concept of Operations Report

The first task shall be to document the existing hardware and software systems for the three Smart Corridors (Silicon Valley ITS, SFgo, and I-580 Smart Corridor), and the Regional TMC (Caltrans TMC and TravInfo® TIC). This shall include the hardware and software necessary for the essential and desirable functions defined below. This task shall also document funded upgrades, including the upgrade to Caltrans CCTV system. The documentation of the existing systems shall be included as an appendix to the Concept of Operations Report.

The second part of this task shall entail developing a brief, written Concept of Operations for the Interim C2C System. The Concept of Operations Report shall describe the types of data that will be transmitted and how the data will be used within the participating centers; and should describe and differentiate between automated functions and manual activities (e.g., how will an incident record be removed from the system when the incident is finished). The Concept of Operations Report shall also briefly describe system operations and maintenance activities and responsibilities, as well as procedures and responsibilities for configuration management and system acceptance testing.

The Concept of Operations Report shall briefly describe four alternative system architectures or high-level conceptual designs for a system to implement the concept of operations. These alternatives may include a system based on the Silicon Valley – ITS Data Exchange System (DEN), a web-based system accessible over both the agency-owned intranet and the Internet, a system based

on the expansion of the existing TravInfo® DATEX interface, and a hybrid system. Briefly present the pro's and con's of each system, including cost to implement and long-term maintenance and operations costs. The Preliminary Concept of Operations Report will be provided to the Peer Group, and discussed at a workshop - conference call. The preliminary report shall be revised to reflect the comments from the Peer Group, and then submitted to the C2C Working Group for review, and presented at one Working Group meeting. The C2C Working Group will be asked to select a final conceptual design.

9.1.2 Detailed Definition of Interfaces

Based on the conceptual design selected for the Interim C2C System, develop a detailed definition of the necessary interfaces. The report shall define the modifications needed to each of the participating systems to implement the Interim C2C System, and clearly identify any areas where the interfaces will not conform to adopted NTCIP standards. The report shall also provide a detailed definition of the modifications of each system, and the budget to accomplish those modifications. The definition of the modifications shall be in sufficient detail to be used as the contractual scope of work for accomplishing the modifications. This report shall provide additional detail on the configuration management system and acceptance testing at each participating center. The preliminary report shall be submitted to the Peer Group and discussed at a workshop – conference call. The preliminary report shall be revised to reflect the comments from the Peer Group, and then submitted to the C2C Working Group for review, and presented at one Working Group meeting.

9.1.3 Interface Control Document

The contractor shall develop a detailed interface control document for the Interim C2C System. The document will define the communications protocols and standards, data dictionary and message sets, configuration management responsibilities and procedures, and detailed plans for acceptance testing. Standards identified in Section 1.2 of this document shall be referenced and followed during the development of the ICD. Some standards have been updated since the development of this Scope of Work. A draft report shall be submitted to the Peer Group for review, followed by a workshop to discuss the draft report.

The Interface Control Document shall provide information sufficient to allow third-party software developers to interface with the C2C platform. The Interface Control Document shall be provided as a design document that will be subject to MTC approval prior to implementation.

The Interface Control Document will reflect a consensus approach and collaborative effort by the software developers of TravInfo® and the Smart Corridors to define a reasonable interface definition for all parties.

The Interface Control Document shall include the following sections:

1. Description of transport layer operation and supported parameters including relevant connection requirements, IP addresses, and ports;
2. The functional intent of all communication transactions;
3. Listing of message sets and data elements cross-referenced to standards documents;
4. Description of any message set, data element, or encoding scheme not derived from and/or documented in a referenced standard;
5. Detailed specifications for any message set that is not defined in current standards;
6. A description of all communication constraints including transaction timing, message sequencing, and transaction frequency; and
7. ASN 1 file containing a complete definition of the protocol elements.

The Interface Control Document shall address the protocols necessary to achieve the functions described in this Scope of Work. To the extent feasible, the Interface Control Document shall utilize elements of the relevant standards. Elements of the Interface Control Document that deviate or extend these standards shall be clearly identified and justification provided. To the extent the standards are utilized, cross-references shall be made in the Interface Control Document to the relevant standard including section and paragraph.

9.2 Software Requirements - Essential

Functional requirements defined below have been derived from the National ITS Architecture by breaking down the Architecture Flows into Data Flows and corresponding Process Specifications. Within each high-level Architecture Flow, there are more detailed Data Flows that further define the function. Each of these Data Flows are mapped to various Process Specifications within the National ITS Architecture. These Process Specifications (or Pspecs for short) form the basis of the detailed functional requirements. A detailed discussion of the Pspecs is not included in this document, but a reference is made to the Pspecs to demonstrate consistency with the National ITS Architecture standard requirements. The National ITS Architecture was used as a guide for defining the C2C functional requirements. Some of the Data Flow titles have been modified to be applicable to C2C functionality.

9.2.1 Video

For the partners to be able to send and receive video between agencies, functions shall support exchange of data between the cameras in the field, the "owning" TMC, and any potential receiving TMC.

The first task of addressing the function between the cameras in the field and the "owning" TMC, which is a C2F function, has already been defined within each Smart Corridor and is not part of C2C requirements.

The main task shall address the function of video exchange between the "owning" TMC and the other TMCs, which is a C2C function. This function corresponds to the **traffic images** Architecture Flow in the National ITS Architecture. In the National ITS Architecture, **traffic images** is a flow that typically occurs between the roadway and the TMC but this flow is adapted for C2C video exchange. Within this Architecture Flow, there are more detailed Data Flows that further define the video function. For the interim C2C System described in this report, the following Data Flows shall be satisfied:

- Video device status – Allow other agencies to know if a camera is functioning, if video is being received by the owning agency, or if a camera is currently being controlled by the owning agency or another agency.
- Traffic video image – Send and receive video to and from other TMCs.

Video exchange between the TMCs shall be achieved through agency-owned fiber or leased lines. Video is currently being displayed at each TMC via the following means:

- Caltrans – Video Monitors via Gardner Systems ATMS Software
- TravInfo® – Receiving video from some Caltrans locations and displayed on TravInfo® website via PB Farradyne development
- Silicon Valley ITS – Analog video to video monitors via IBI DEN. Most video is pan-tilt-zoom but some are fixed video images.

- I-580 Smart Corridor – Analog video to video monitors via Naztec Streetwise
- SF*go* – Anticipated to be displayed on Video Monitors. Software to be determined.

The C2C system shall support the following data flows and the detailed processes defined for each function in the National ITS Architecture:

9.2.1.1 Video Device Status

The following steps define the requirements for establishing the function of storing status data for each camera location within each Smart Corridor or Caltrans. These steps are consistent with the relevant PSpecs of the National ITS Architecture including *1.1.4.2 – Provide Traffic Operations Personnel Traffic Data Interface*, and *1.2.8.1 – Collect Indicator Fault Data*.

- The software shall monitor the operating status of all CCTV cameras in each Smart Corridor and Caltrans. The status shall indicate if a camera is properly operating or not, and whether the video is being viewed and controlled by another agency. That agency shall be identified as part of the status information. This status information shall be accessible by all TMCs simultaneously via fiber optic cable or leased lines.
- The status information shall be updated at a maximum of 15-minute intervals.

9.2.1.2 Process Traffic Video Image

The following steps define the requirements for routing video images between the Smart Corridors and Caltrans. These steps are consistent with the relevant PSpec of the National ITS Architecture, *1.3.1.3 – Process Traffic Images*.

- The software shall accept requests from any Smart Corridor to receive feeds from the Regional TMC. Similarly, the Regional TMC shall be able to request video feeds from each Smart Corridor.
- The software shall process the video feed requests and determine the validity of granting those requests. A request shall be granted if the owning agency is not operating the camera being requested.
- If a video request is granted, the video shall be routed from the "owning" agency to the requesting TMC at a frame rate equal to what the owning agency is receiving. This video shall be displayed on the requesting TMC's designated video output. Once the requested video has been received, the Smart Corridor or Caltrans system will locally route the video to the desired video display within the Smart Corridor system.
- If the request is denied, the requesting TMC shall be notified with an on-screen message transmitted to the location of the request.
- If an owning agency chooses to prohibit video being routed to other agencies, the owning agency shall be able to select the command within the user interface.

Additional relevant data flows from the National ITS Architecture to be addressed in the Interface Control Document include the following:

- *video_device_status* – Indication that a fault has been found with the processing of video data.
- *traffic_video_image_for_display* – Contains video image to support operator monitoring of traffic flow.

- *traffic_video_image* – Sub-data flow containing video image to support operator monitoring applications.
- *ttop_video_image_output* – Video image which shows traffic images sent to traffic operations personnel.

9.2.2 Camera Control

For the partners to be able to share control of video devices, functions shall support allowing remote control of the "owning" agency's devices from the partner agencies' TMCs. This function corresponds to the **video surveillance control** Architecture Flow. In the National ITS Architecture, **video surveillance control** is a flow that typically occurs between the roadway and the TMC but this flow is adapted to C2C video control. Within this Architecture Flow, there is one more detailed Data Flow that further defines the video control function. For the interim C2C System described in this report, the following Data Flow is relevant:

- Video image control – Send and receive pan, tilt, and zoom functions for CCTV cameras by other agencies, view preset images by other agencies

The following steps define the requirement for allowing an outside agency to control CCTV cameras remotely. These steps are consistent with the relevant PSpec, which includes *1.3.4.2 – Provide Traffic Operations Personnel Video Image Control Interface*. The process shall support the following data flow from the National ITS Architecture:

9.2.2.1 Video Image Control

- The software shall allow any of the Smart Corridor TMCs to control CCTV cameras owned by Caltrans by selecting preset camera images. Similarly, the Regional TMC shall be able to control CCTV cameras owned by each of the Smart Corridors by selecting preset camera images. All TMCs shall allow control of preset camera positions.
- If a request for command is granted, the requesting agency shall be presented with video screen captures representing preset views that the requesting agency shall be allowed to choose from. In addition, a text description of the preset view shall be displayed. A click on an image shall open a window displaying the live video feed of the camera selected.
- The owning agency shall always have priority to view, control, and prohibit control and viewing of their own camera.
- If an owning agency chooses to gain control of a camera being controlled by another agency, the owning agency shall have the ability to regain control of the camera and prevent further control by operators at the remote agency.

Additional relevant data flows from the National ITS Architecture to be addressed in the Interface Control Document include the following:

- *remote_video_image_control* – This is a request to control images of an outside agency.
- *video_camera_control_strategy* – Contains predefined camera management strategies based on operational strategies for camera control, including presets.

9.2.3 Sensor Data

To send and receive volume, speed and occupancy data, functions shall support exchange of data between the detectors in the field, the "owning" TMC, and any potential receiving TMC.

The first task of addressing the function between the detectors in the field and the "owning" TMC is a C2F function that has already been defined within each Smart Corridor and is not part of the C2C requirements.

The main task is to address the function of vehicle data exchange between the "owning" TMC and the other TMCs, which is a C2C function. This function corresponds to the **traffic information coordination, road network conditions** and **request for road network conditions** Architecture Flows in the National ITS Architecture. Within these Architecture Flows, there are more detailed data flows that further define the vehicle data function. For the interim C2C system described in this report, the following data flows are relevant:

- TMC transfer data – Identification of data being sent and received from other TMCs.
- TMC identity – Identification of agency that is using or requesting particular devices or information.
- TMC data request – Send and receive requests for information from other TMCs.
- Sensor data for distribution – Storage of raw and processed data for distribution.
- Current road network state – Send and receive arterial traffic data.
- Current highway network state – Send and receive freeway traffic data.
- Traffic data distribution request – Send and receive requests for traffic data.

The software shall extract and transfer sensor data from existing real-time data to other agencies based on data requests. The PSpecs related to sensor data include *1.1.4.1 – Retrieve Traffic Data*, *1.1.4.6 – Provide Traffic Data Retrieval Interface*, *1.1.5 – Exchange Data with other Traffic Centers*, *1.2.2.1 – Determine Indicator State for Freeway Management*, and *1.2.2.2 – Determine Indicator State for Road Management*. The process shall support the following data flows from the National ITS Architecture:

9.2.3.1 Traffic Data Distribution Request

- The software shall receive requests from a Smart Corridor TMC for traffic sensor data from the Regional TMC. Similarly, the software shall receive a request from the Regional TMC for traffic sensor data from any Smart Corridor TMC. Sensor data shall be requested in terms of a user-selectable location, and a user-selectable timeframe and increment. Possible timeframes shall include previous hour, previous day, previous week, previous month, previous year, or a summary of any unit (hour, day, week, month, or year). Possible increments shall be 5-minute, 15-minute, 1-hour, 1-day, 1-week, 1-month, or 1-year summaries.
- If the request is deemed invalid, a message shall be sent to the requesting agency with an on-screen notification prompting a new request.
- The software provider shall specify in the Interface Control Document the format and content of sensor data requests and expected responses.

9.2.3.2 TMC Transfer Sensor Data

- The software shall identify and display sensor data that is being sent and received by all TMCs. Sensor data shall include lane-by-lane summary of volume and speed based on requested location, and real-time travel time information based on Electronic Toll Collection tag readers.

9.2.3.3 TMC Identity

- The software shall build a log detailing the requests being made of each agency such that each agency, as owners, can view requests that are being made of their data.
- The software shall include in the log the identity of TMCs requesting and receiving sensor and incident data, with provisions to include CMS, ramp meter, and HAR data in the future.

9.2.3.4 Current Road Network State (Sensor Data)

- The software shall package requested arterial traffic sensor data from the owning TMC and process the package into a format to be received by the requesting TMC. This information shall include volume and speed.
- The software shall route the arterial traffic sensor data package from the owner's system to the requesting TMC in a format that shall be received by the requesting TMC. Once the requested data has been received, the Smart Corridor or Regional TMC will locally route the data to the desired output (GUI or database).

9.2.3.5 Current Highway Network State (Sensor Data)

- The software shall package requested freeway traffic sensor data from the owning TMC and process the package into a format to be received by the requesting TMC. This information shall include volume and speed.
- The software shall route the freeway traffic sensor data package from the owner's system to the requesting TMC in a format that shall be received by the requesting TMC. Once the requested data has been received, the Smart Corridor or Regional TMC will locally route the data to the desired output (GUI or database).

Additional relevant data flows from the National ITS Architecture to be addressed in the Interface Control Document include the following:

- *current_data* – Contains data about a current traffic state, updated periodically.
- *traffic_flow_state* – Contains current traffic flow conditions, used as a means of packaging data to be sent to other agencies.
- *current_roadway_network_data* – Contains current traffic conditions for determining traffic management strategies.
- *request_traffic_operations_data* – Request traffic data output and include current, long term, or predicted data, or any combination of the three.
- *retrieved_traffic_operations_data* – Contains output data and include current, long term, or predicted data, or any combination of the three.
- *traffic_data_for_distribution* – Contains response to a request for traffic information data and include current and historical data, or any combination of the two.
- *ftop_traffic_information_requests* – Contains requests for traffic information to review and clarify how a traffic situation is being managed.

9.2.4 Incident Data

To send and receive incident data, functions shall support allowing incident location, severity and expected duration to be exchanged between TMCs. This function corresponds to the **traffic information coordination** Architecture Flow in the National ITS Architecture. Within this

Architecture Flow, there are more detailed data flows that further define the vehicle data function. For the interim C2C system described in this report, the following data flows are relevant:

- TMC transfer data – Identification of incident data being sent and received from other TMCs.
- TMC identity – Identification of agency that is using or requesting incident information.
- TMC data request – Send and receive requests for incident information from other TMCs.
- Current road network state – Send and receive arterial incident data.
- Current highway network state – Send and receive freeway incident data.

The software shall extract and transfer incident data from existing real-time data to other agencies based on data requests. The PSpecs related to incident data include *1.1.5 – Exchange Data with other Traffic Centers* and *1.3.2.2 – Review and Classify Possible Incidents*. The process shall support the following data flows from the National ITS Architecture:

9.2.4.1 TMC Incident Data Request

- The software shall receive requests from any Smart Corridor TMC to receive incident data from the Regional TMC. Similarly, the software shall receive requests from the Regional TMC to receive incident data from any Smart Corridor TMC. The request shall be in the form of a user-selectable location, timeframe and increment. Possible timeframes shall include previous day, previous week, previous month, previous year, or a summary of any unit (hour, day, week, month, or year). Possible increments shall be 1-hour, 1-day, 1-week, 1-month, or 1-year summaries.
- If the request is deemed invalid, a message shall be sent to the requesting agency with an on-screen notification prompting a new request.
- The software provider shall specify in the Interface Control Document the format and contents of the data request and the expected response. The requests shall be sent to the owning agency of the information requested.

9.2.4.2 TMC Transfer Incident Data

- The software shall identify, store, and display incident data that is being sent and received by all TMCs. Incident data shall include incident location, severity, expected duration, start time, expected traffic impact, and incident type.

9.2.4.3 Current Road Network State (Incident Data) – Desirable

- The software shall package requested arterial incident data from the owning TMC and process the package into a format to be received by the requesting TMC.
- The software shall route the arterial incident data package from the owner's system to the requesting TMC in a format that shall be received by the requesting TMC.

9.2.4.4 Current Highway Network State (Incident Data)

- The software shall package requested freeway incident data from the owning TMC and process the package into a format to be received by the requesting TMC.

- The software shall route the freeway incident data package from the owner's system to the requesting TMC in a format that shall be received by the requesting TMC.

Additional relevant data flows from the National ITS Architecture to be addressed in the Interface Control Document include the following:

- *current_incidents_new_data* – Contains new current incident data and includes parameters describing an incident.
- *incident_details* – Provides information about current incidents including location, duration, and type.
- *incident_details_request* – Used to request incident details.

9.3 Additional Software Requirements – Desirable

The network developed for this project shall include provisions to exchange ramp meter, CMS, and HAR data between the Regional TMC and the Smart Corridor TMCs.

9.3.1 Ramp Meters

For Caltrans to be able to send ramp metering information to the other partner TMCs, functions shall support allowing metering rates to be exchanged between TMCs. This function corresponds to the **traffic control coordination** and **freeway control status** Architecture Flows in the National ITS Architecture. In the National ITS Architecture, **freeway control status** is a flow that typically occurs between the roadway and the TMC but this flow is adapted to the function of transmitting metering rates between TMCs. Within these Architecture Flows, there are more detailed Data Flows that further define the vehicle data function. For the interim C2C System described in this report, the following Data Flows are relevant:

- TMC control and status – Identification of ramp meters and data controlled by a particular TMC, as well as control of "owning" agency ramp meter rates by another agency.
- TMC identity – Identification of agency that is using or requesting particular ramp meters or information.
- Ramp meter input data from highways – Storage and exchange of metering rates and actual state of operation. (Note that control of ramp metering rates is not a function that Caltrans will allow at the local agency level.)

The software shall extract and transfer ramp meter data from existing real-time data to other agencies based on data requests. The PSpecs related to ramp meter data include *1.1.5 – Exchange Data with other Traffic Centers* and *1.2.4.2 – Output Control Data for Freeways*. The process shall support the following data flows from the National ITS Architecture:

9.3.1.1 TMC Ramp Meter Data Request

- The software shall receive requests from any Smart Corridor TMC for ramp meter data from Caltrans. The request shall be in the form of a user-selectable location, timeframe and increment. Possible timeframes shall include previous hour, previous day, previous week, previous month, previous year, or a summary of any unit (hour, day, week, month, or year). Possible increments shall be 15-minute, 1-hour, 1-day, 1-week, 1-month, or 1-year summaries.
- If the request is deemed invalid, a message shall be sent to the requesting agency with an on-screen notification prompting a new request.

- The software provider shall specify in the Interface Control Document the format and contents of the data request and expected response. The requests shall be sent to the owning agency of the information requested.

9.3.1.2 TMC Ramp Meter Control and Status

- The software shall package the ramp meter status based on the requested data and transfer the information to the requesting agency. Ramp meter status data shall include the metering rate and the status of the ramp meter operation at the location(s) requested by a Smart Corridor TMC. Once the requested data has been received, the Smart Corridor or Regional TMC will locally route the data to the desired output (GUI or database).

9.3.1.3 Ramp Meter Input Data from Highways

- The software shall package the ramp meter input data to include existing metering rates, ramp volume and occupancy, vehicle headway, and actual state of operation.

Additional relevant data flows from the National ITS Architecture to be addressed in the Interface Control Document include the following:

- *current_ramp_state* – Transfers current ramp state, either open or closed.
- *ramp_data* – Contains ramp data including volume, speed, and occupancy on ramp.
- *ramp_signal_state* – Indicates state of the ramp meters.

9.3.2 CMS

For the partners to be able to exchange CMS information, functions shall support allowing the current messages displayed and requests for messages to be exchanged between TMCs. This function corresponds to the **traffic control coordination, roadway information system data** and **roadway information system status** Architecture Flows in the National ITS Architecture. In the National ITS Architecture, **roadway information system data** and **roadway information system status** are flows that typically occur between the roadway and the TMC but these flows are adapted to transmitting CMS messages and requests for messages between TMCs. Within these Architecture Flows, there are more detailed Data Flows that further define the vehicle data function. For the interim C2C System described in this report, the following Data Flows are relevant:

- TMC control and status – Identification of CMS and data controlled by a particular TMC.
- TMC identity – Identification of agency that is using or requesting particular CMS or information.
- CMS status – Transmit sign status to other TMCs.
- CMS data – Identification of actual data (messages or requests) being sent to CMS by other TMCs.

The software shall extract and transfer CMS data from existing real-time data to other agencies based on data requests. The PSpecs related to CMS data include *1.1.5 – Exchange Data with other Traffic Centers, 1.2.4.4 – Output Roadway Information Data, and 1.2.7.9 – Process Roadway Information Data*. The process shall support the following data flows from the National ITS Architecture:

9.3.2.1 TMC CMS Data Request

- The software shall receive requests from any Smart Corridor TMC for CMS data from the Regional TMC.
- If the request is deemed invalid, a message shall be sent to the requesting agency with an on-screen notification prompting a new request.
- The software provider shall develop an Interface Control Document specifying the format and contents of the data request and expected response. The requests shall be sent to the owning agency of the information requested.

9.3.2.2 TMC CMS Control and Status

- The software shall package the current status of the requested CMS and transfer the information to the requesting agency.
- Once the requested data has been received, the Smart Corridor or Regional TMC will locally route the data to the desired output (GUI or database).

9.3.2.3 CMS Status

- The software shall include a database containing the operating status of each CMS. The database shall indicate if a CMS is properly operating or not. This database shall be accessible by all Smart Corridor TMCs simultaneously.
- The operating status database shall be updated at a maximum of 15-minute intervals.

9.3.2.4 CMS Data

- The software shall package CMS data and transfer the information to the requesting agency. This information shall include actual messages displayed on sign or message requests by Smart Corridor TMCs.

9.3.3 HAR

For the partners to be able to exchange HAR information, functions shall support allowing the current HAR messages being broadcast and requests for HAR messages to be exchanged between TMCs. This function corresponds to the **broadcast advisory, roadway information system data** and **roadway information system status** Architecture Flows in the National ITS Architecture. In the National ITS Architecture, **roadway information system data** and **roadway information system status** are flows that typically occur between the roadway and the TMC but these flows are adapted to transmitting HAR messages and requests for messages between TMCs. Within these Architecture Flows, there are more detailed Data Flows that further define the vehicle data function. For the interim C2C System described in this report, the following Data Flows are relevant:

- HAR status – Identification of broadcast messages, message capacity, and operational status.
- HAR data – Identification of message being broadcast.

The software shall extract and transfer HAR data from existing real-time data to other agencies based on data requests. The PSpecs related to HAR data include *1.1.5 – Exchange Data with other Traffic Centers, 1.2.4.4 – Output Roadway Information Data, and 1.2.7.9 – Process Roadway Information Data*. The process shall support the following data flows from the National ITS Architecture:

9.3.3.1 TMC HAR Data Request

- The software shall receive requests from any Smart Corridor TMC for HAR data from the Regional TMC.
- If the request is deemed invalid, a message shall be sent to the requesting agency with an on-screen notification prompting a new request.
- The software provider shall develop an Interface Control Document specifying the format and contents of the data request and expected response. The requests shall be sent to the owning agency of the information requested.

9.3.3.2 HAR Status

- The software shall package the current status of the requested HAR and transfer the information to the requesting agency.
- The software shall display the information on the requesting agency computer.

9.3.3.3 HAR Data

- The software shall package HAR data and transfer the information to the requesting agency. This information shall include actual messages transmitted on HAR or message requests by Smart Corridor TMCs.

9.3.4 Traffic Signals

For the partners to be able to exchange traffic signal timing data and control, functions shall support allowing the cycles, splits, offsets and phasing to be exchanged between TMCs. This function corresponds to the **traffic control coordination** and the **traffic information coordination** Architecture Flows in the National ITS Architecture. Within these Architecture Flows, there are more detailed Data Flows that further define the vehicle data function. For the interim C2C System described in this report, the following Data Flows are relevant:

- TMC transfer data – Identification of data being sent and received from other TMCs.
- TMC identity – Identification of agency that is using or requesting particular traffic signals or information.
- TMC data request – Send and receive requests for information from other TMCs.
- TMC control and status – Identification of traffic signals and data controlled by a particular TMC. This also includes provisions to transfer data to download to local controller.

The software shall extract and transfer traffic signal data from existing real-time data to other agencies based on data requests. The PSpec related to traffic signal data includes *1.1.5 – Exchange Data with other Traffic Centers*. The process shall support the following data flows from the National ITS Architecture:

9.3.4.1 TMC Traffic Signal Data Request

- The software shall receive requests from any Smart Corridor TMC for traffic signal data from Caltrans. The request shall be in the form of a user-selectable location, timeframe and traffic signal parameters. Timeframes shall include previous hour, previous day, previous week, previous month, previous year, or a summary of any unit (hour, day, week,

month, or year). Traffic signal parameters shall include cycle length, splits, offsets, phasing, and status.

9.4 Testing

9.4.1 Software Acceptance Test

The contractor shall develop a test plan for the C2C software. The test plan shall be derived from a matrix listing the software requirements detailed in the Scope of Work. The test plan shall indicate the required test or test procedure that must be conducted to demonstrate that the requirements in the Scope of Work are successfully met. Each test shall indicate values for pass and fail or an acceptable range of values.

The contractor shall submit the requirements matrix and test plan for approval by the MTC. The contractor shall schedule the acceptance test 30 days prior to executing the test. The contractor shall correct any deficiencies identified in the software during the test at no additional expense to the MTC.

9.4.2 Observation Period

The software shall operate for a period of six months without operational failure prior to final system acceptance. The contractor shall correct any operational failures identified in the software during the observation period at no additional expense to the MTC. Successful completion of the observation period shall result in final acceptance of the software.

9.4.3 Warranty

The contractor shall warrant the operation of the software for a period of one year following final software acceptance. The contractor shall correct any bugs identified in the software during the warranty period at no additional expense to the MTC.

9.5 Training

The contractor shall provide a total of 2 one-day training sessions on the operation of the C2C software. The training sessions shall be scheduled by the MTC 30 days prior to each session.

9.6 Glossary

ATMS	Advanced Traffic Management System
BART	Bay Area Rapid Transit
C2C	Center-to-Center
CCTV Camera	Closed Circuit Television Camera
CMS	Changeable Message Sign
CORBA	Common Object Request Broker Architecture
DATEX-ASN	DATa EXchange in Abstract Syntax Notation
DEN	Data Exchange Network

GUI	Graphical User Interface
HAR	Highway Advisory Radio
ITS	Intelligent Transportation System
LAN	Local Area Network
MTC	Metropolitan Transportation Commission
OC	Optical Carrier
SONET	Synchronous Optical NETwork
TMC	Traffic Management Center
WAN	Wide Area Network