SAN FRANCISCO - OAKLAND BAY BRIDGE EAST SPAN REPLACEMENT ALTERNATIVES

May 1997

California Department of Transportation

Cable-Stayed Replacement Alternatives

Janise Sundstrom
Senior Bridge Engineer
SFOBB Special Analysis Branch
May 13, 1997

CALIFORNIA DEPARTMENT OF TRANSPORTATION
SFOBB EAST SPANS REPLACEMENT PROJECT

Outline

- Assumptions & Constraints
- Design Guidelines
- Alignment
- Analysis
- Cable-Stayed Alternatives
  - Substructure
  - Towers & Superstructure
    - Alternative 1
    - Alternatives 2, & 3

Assumptions & Constraints

- straight alignment
- maintain existing vertical clearance in shipping channel _
- locate deepest cable-stayed foundation in the approximate location of existing E3
- keep tower height at or below tallest tower on west SFOBB

Design Guidelines

- investigate higher strength concrete where necessary; 8000 to 10,000 psi
- contact industry representatives with expertise
- use other cable-stayed bridges as guides
- look at offshore industry for substructure design
- investigate appropriate erection methods
- utilize simplicity and repetition
- loadings
  - size towers and foundations for seismic
  - size superstructures for dead and live loads

Alignment

- Northern extended (Alternatives 1 & 2)
  - tangent out of the tunnel
  - locate deepest foundation at approximate location of existing E3
  - straight cable-stayed segment, curved viaduct
- Southern adjacent (Alternative 3)
  - proposed as a shorter route
  - less impacts on historic military buildings
  - significant utility conflicts

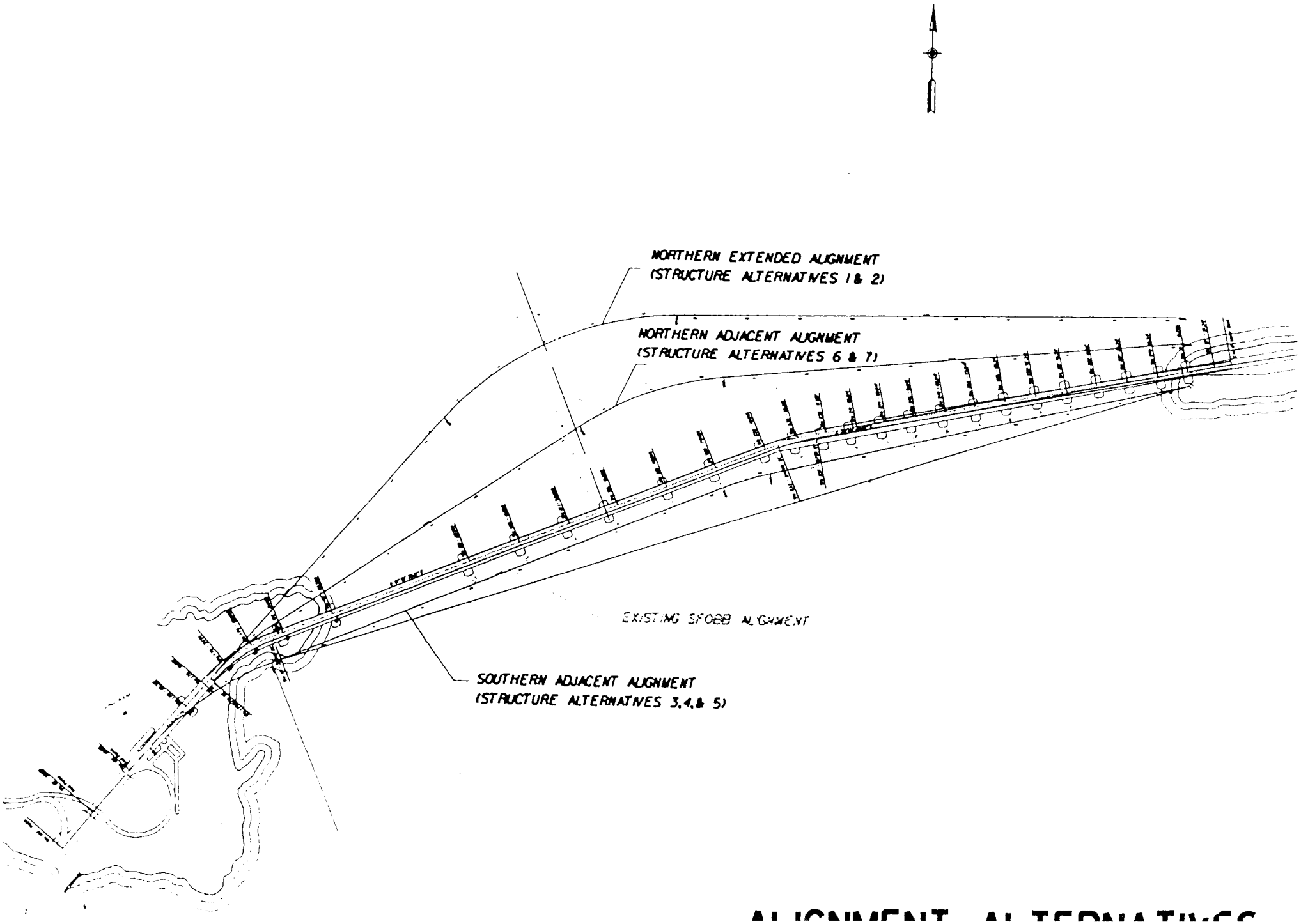

ALIGNMENT ALTERNATIVES

Analysis

- Superstructure
  - linear elastic model for cable forces due to factored dead + live loads
- Towers
  - linear elastic static push for seismic loads, target ductility 1.5 (essentially elastic)
- Foundations
  - nonlinear soil properties, linear pile properties modeled (GROUP) for tower plastic moment

Cable-Stayed Alternatives

- Alternative 1
  - single level PC/ PS concrete cable-stayed bridge
  - single level PC/ PS concrete viaduct
- Alternative 2
  - double deck steel cable-stayed bridge
  - double deck steel warren truss viaduct
- Alternative 3
  - double deck steel cable-stayed bridge
  - double deck CIP prestressed concrete viaduct

CABLE-STAYED ALTERNATIVES FOR A NEW EAST SFOBB

ALTERNATIVE 1

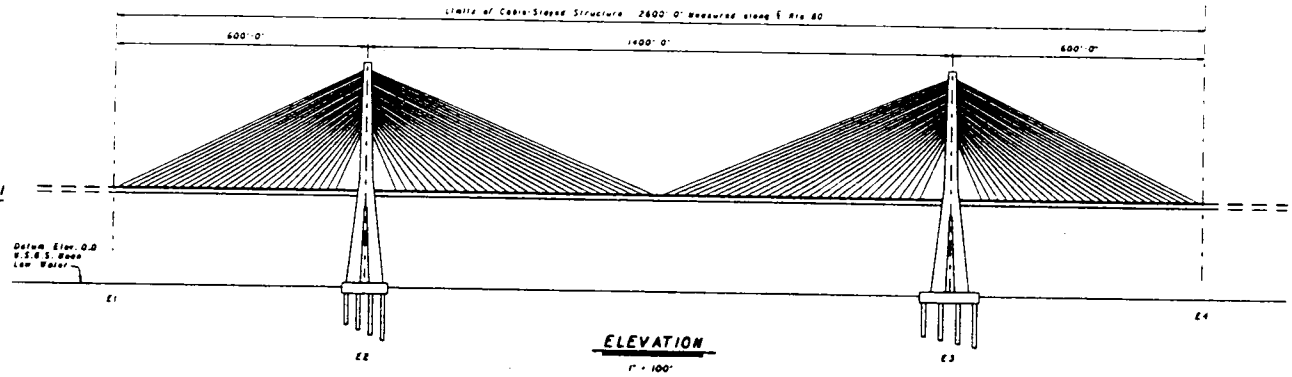

ELEVATION

1" = 100'

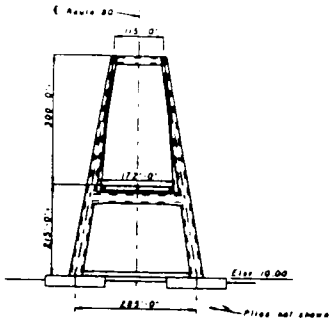

SECTION - PIERS E2,E3

1" = 100'

ALTERNATIVE 2

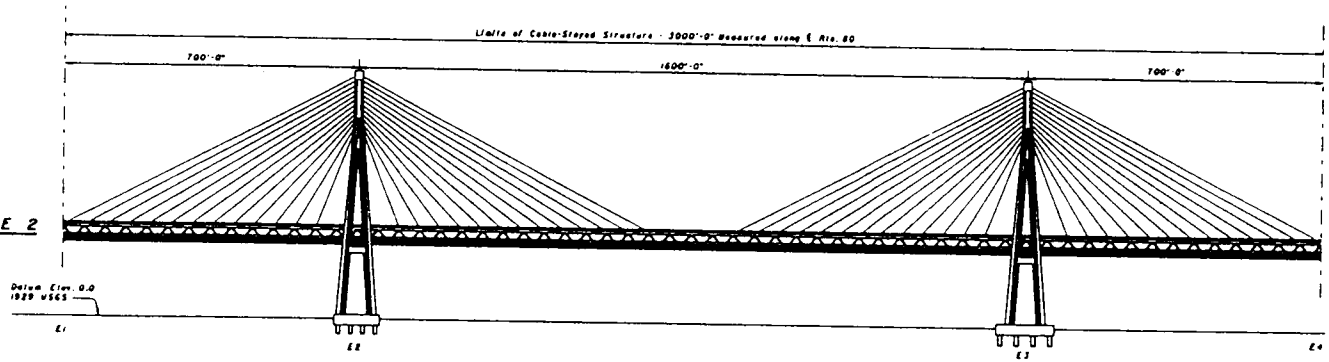

ELEVATION

1" = 100'

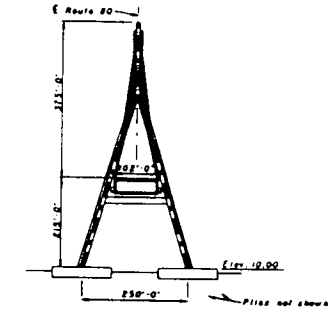

SECTION - PIERS E2,E3

1" = 100'

ALTERNATIVE 3

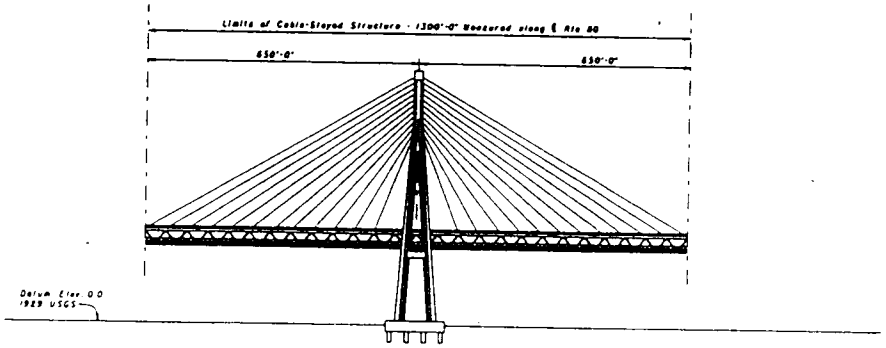

ELEVATION

1" = 100'

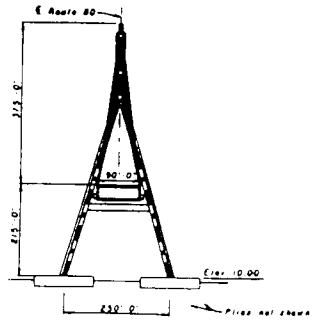

SECTION - PIER E2

1" = 100'

Substructures

- Offshore type foundation construction
  - precast, cellular pile cap to be floated to location, sunk and used as a driving template (10,000 psi)
- E2 location: (~ 40' to rock)
  - end bearing
  - 9' diameter steel pile embedded in and tied down to rock, filled with concrete
- E3 location: (~ 305' to rock)
  - friction and end bearing
  - 10' diameter steel pile with 9' diameter pile inside, grout in between

Design Notes.

1. Pile caps are hollow cell precast prestressed concrete with 24" deck and soffit sections.
2. 9'-0" diameter shells will extend 20'-0" into the pile cap and will extend 15'-0" into bedrock.
3. Reinforced concrete will be required in each of the piles.

NOTES:

Pier E2 Left shown, Pier E2 right similar.

For details not shown see "Pier Tower Details" sheet.

Denotes pile cap cell filled with concrete after placement of pile.

DIST.	COUNTY	ROUTE	POST MILES TOTAL PROJECT	SHEET NO.	TOTAL SHEETS
04					

REGISTERED ENGINEER CIVIL

PLANS APPROVAL DATE

REGISTERED PROFESSIONAL ENGINEER JAMES SUNDSTROM C 048590 6-30-96 CIVIL STATE OF CALIFORNIA

The State of California or its officers or agents shall not be responsible for the accuracy or completeness of electronic copies of this plan sheet.

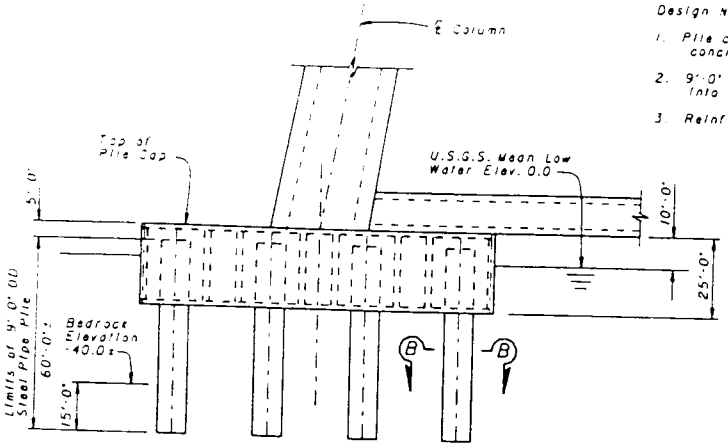

PART ELEVATION

1" = 20'

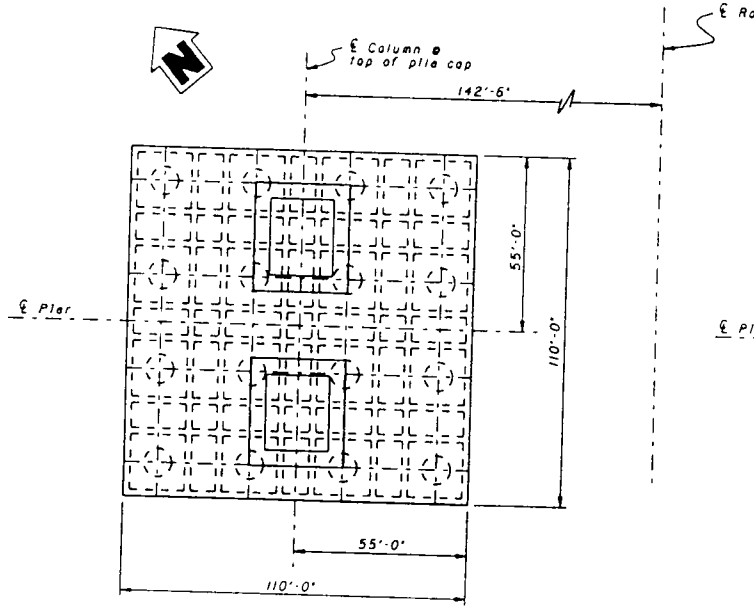

PILE CAP PLAN

1" = 20'

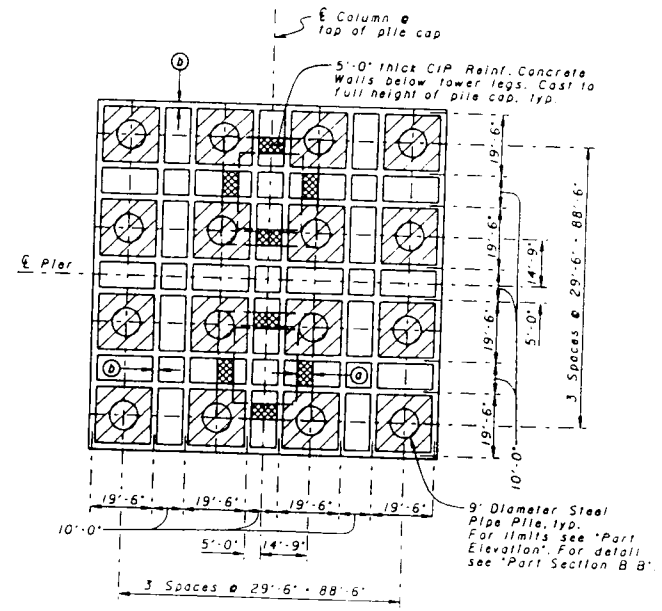

PILE CAP CELL, PILE LAYOUT

1" = 20'

ⓐ 5'-0" Typ.

ⓑ 2'-0" Typ.

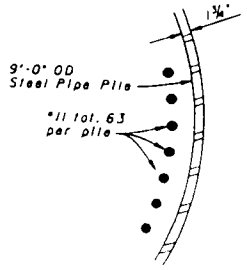

PART SECTION B-B

1" = 1'-0"

DESIGN	BY E. ZECHLIN 3-96	CHECKED J. SUNDSTROM 3-96	STATE OF CALIFORNIA DEPARTMENT OF TRANSPORTATION
DETAILS	BY D.A. SANDERSON 3-96	CHECKED E. ZECHLIN 3-96	
QUANTITIES	BY	CHECKED	

ORIGINAL SCALE IN INCHES FOR REDUCED PLANS

DIVISION OF STRUCTURES
STRUCTURE DESIGN SA

BRIDGE NO. 33-0025
POST MILE 1.15

SFOBB REPLACEMENT - ALTERNATIVE 1

PIER E2 FOUNDATION DETAILS

CU 04
EA 01200K

DISREGARD PRINTS BEARING EARLIER REVISION DATES

REVISION DATES PRELIMINARY STAGE ONLY

SHEET 3 OF 7

USERNAME

DIST	COUNTY	ROUTE	POST MILES TOTAL PROJECT	SHEET NO	TOTAL SHEETS
04					

REGISTERED ENGINEER - CIVIL

PLANS APPROVAL DATE

The State of California or its officers or agents shall not be responsible for the accuracy or completeness of electronic copies of this plan sheet.

Design Notes:

1. Pile caps are hollow cell precast prestressed concrete with 24" deck and soffit sections.
2. Outer 10' diameter shells will extend 15'-0" into the pilecap and will extend to bedrock.
3. Inner 9' diameter shells will extend 23'-6" into the pilecap and will extend 10'-0" into bedrock.
4. A concrete plug will be required at the tip of the piles.
5. The hollow portion between steel shells will be filled with high strength grout.

NOTES:

Pier E3 Left shown, Pier E3 right similar.

For details not shown see "Pier Tower Details" sheet.

Denotes pile cap cell filled with concrete after placement of pile.

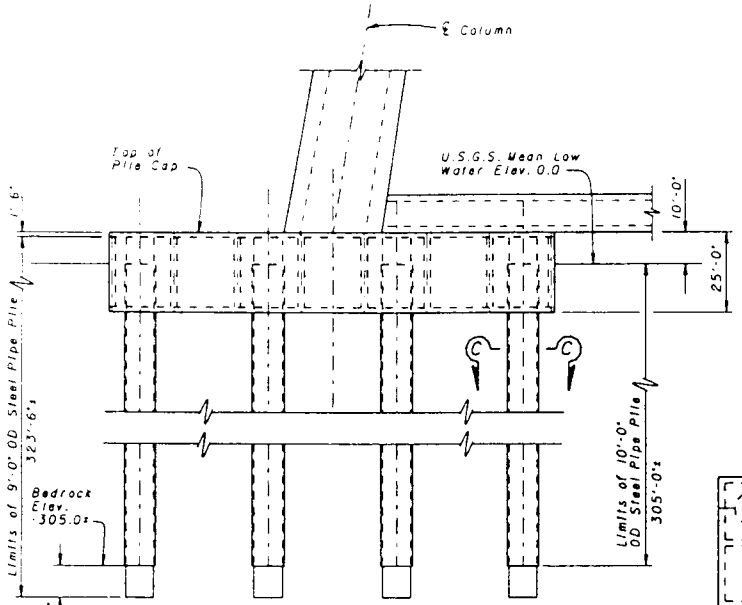

PART ELEVATION

1" = 20'

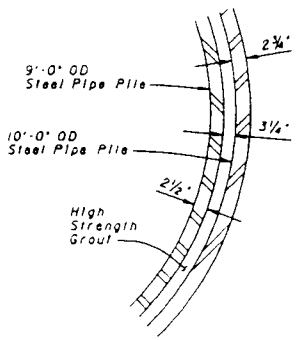

PART SECTION C-C

1" = 1'-0"

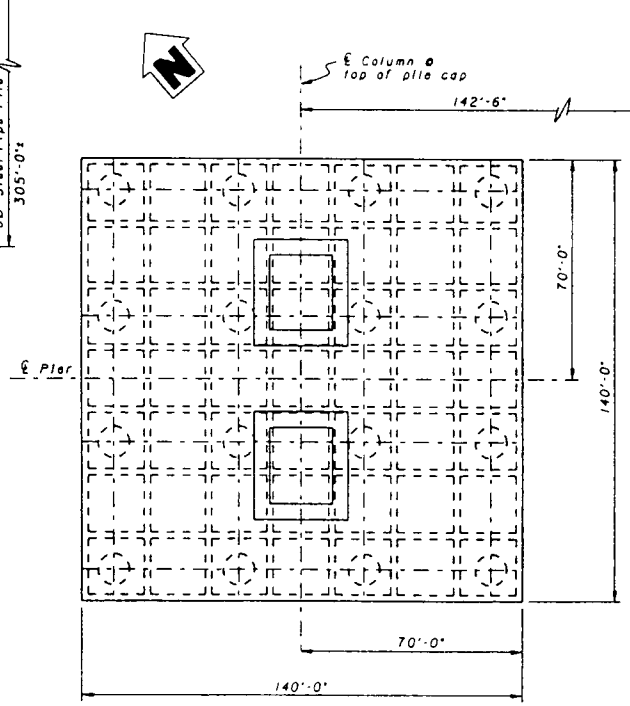

PILE CAP PLAN

1" = 20'

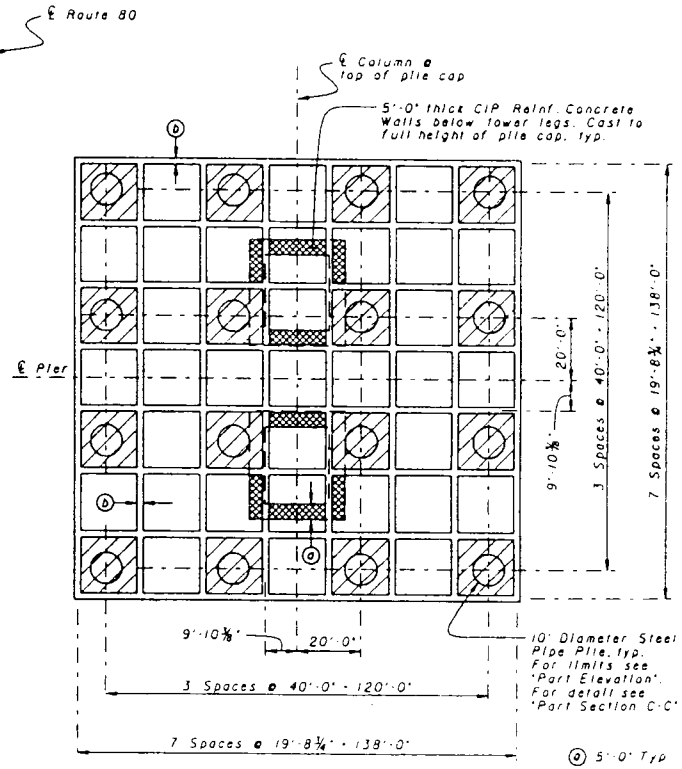

PILE CAP CELL, PILE LAYOUT

1" = 20'

DESIGN	B. ZECHLIN 3-96	CHECKED J. SUNDSTROM 3-96	
DETAILS	D.A. SANDERSON 3-96	CHECKED E. ZECHLIN 3-96	
QUANTITIES		CHECKED	

STATE OF CALIFORNIA
DEPARTMENT OF TRANSPORTATION

DIVISION OF STRUCTURES
STRUCTURE DESIGN SA

CU 04
EA 01200K

BRIDGE NO 33-0025
POST MILE 1.15

SFOBB REPLACEMENT - ALTERNATIVE I

PIER E3 FOUNDATION DETAILS

ORIGINAL SCALE IN INCHES FOR REDUCED PLANS 0 1 2 3

DISREGARD PRINTS BEARING EARLIER REVISION DATES

SHEET 4 OF 7

Towers; Alternative 1

- Vertically prestressed cellular CIP concrete towers
- Geometry based on literature search of other cable-stayed bridges around the world
  - Luling Bridge, Louisiana (tower configuration)
  - Baytown Bridge, Texas, alternative (width)
- T = 3.5 sec (both longitudinal and transverse)
- f'c= 6000 psi

DIST.	COUNTY	ROUTE	POST MILES TOTAL PROJECT	SHEET NO.	TOTAL SHEETS
04					

REGISTERED ENGINEER - CIVIL

PLANS APPROVAL DATE

REGISTERED PROFESSIONAL ENGINEER JAMES SUNDSTROM No. C 048590 Exp. 6-30-96 CIVIL STATE OF CALIFORNIA

The State of California or its officers or agents shall not be responsible for the accuracy or completeness of electronic copies of this plan sheet.

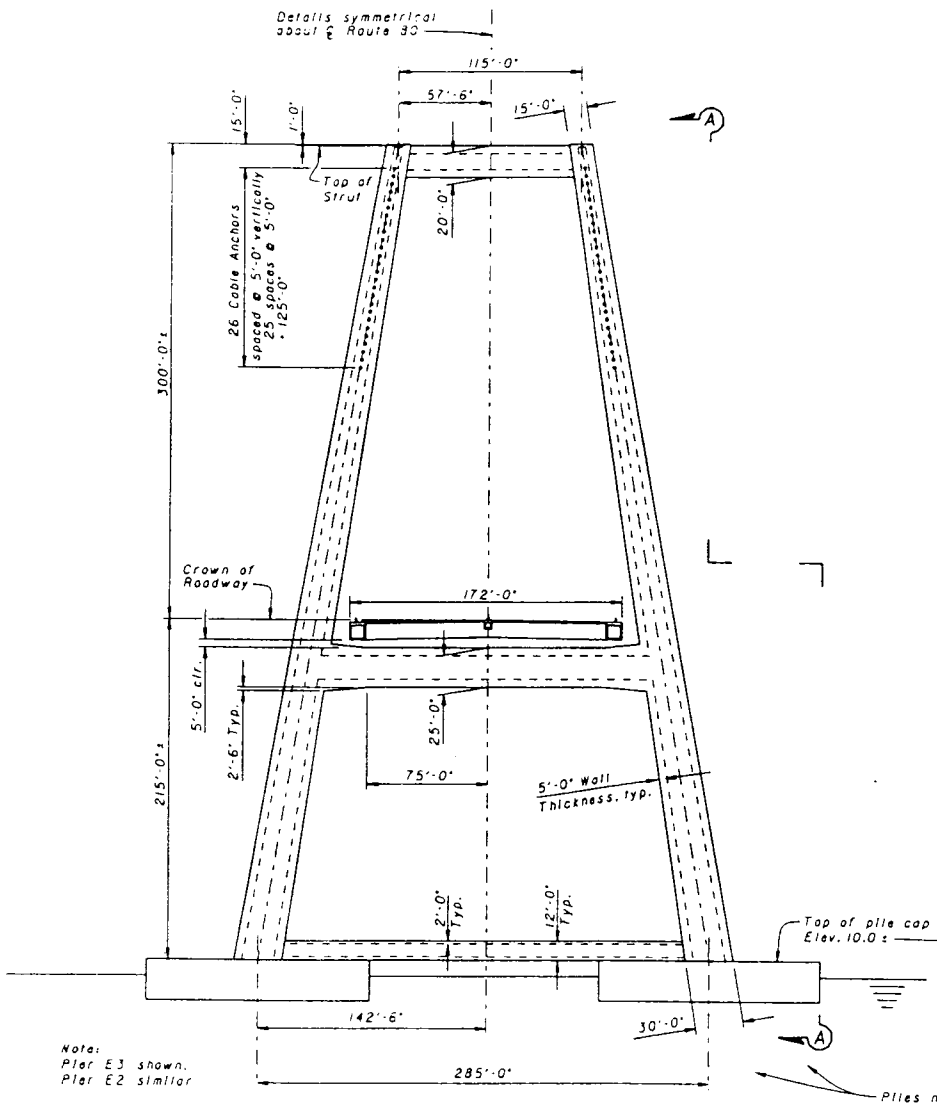

ELEVATION - PIERS E2, E3

1" = 40'

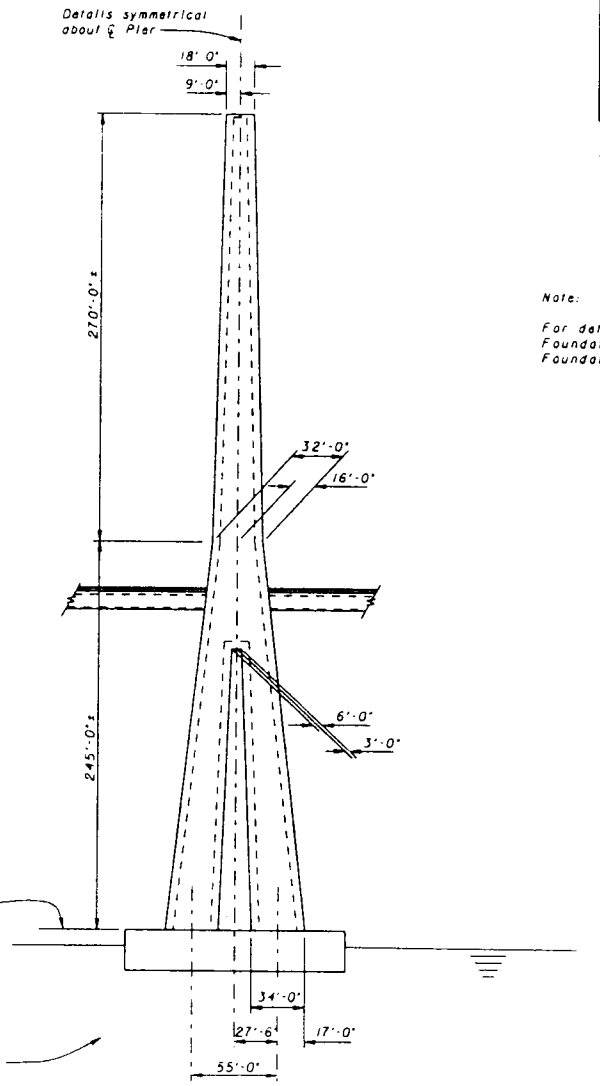

VIEW A-A

1" = 40'

Note:

For details not shown see "Pier E2 Foundation Details" and "Pier E3 Foundation Details" sheets.

DESIGN	BY O. SOON 3-96	CHECKED J. SUNDSTROM 3-96	
DETAILS	BY O.A. SANDERSON 3-96	CHECKED O. SOON 3-96	
QUANTITIES	BY	CHECKED	

STATE OF CALIFORNIA
DEPARTMENT OF TRANSPORTATION

DIVISION OF STRUCTURES
STRUCTURE DESIGN SA

BRIDGE NO. 33-0025
POST MILE 1.15

SFOBB REPLACEMENT - ALTERNATIVE I

PIER TOWER DETAILS

ORIGINAL SCALE IN INCHES FOR REDUCED PLANS 0 1 2 3

CU 04
EA 01200K

DISREGARD PRINTS BEARING EARLIER REVISION DATES

REVISION DATES PRELIMINARY STAGE ONLY

SHEET 2 OF 7

USERNAME = D BUSER

Superstructure; Alternative 1

- 1400' main span precast, prestressed, segmentally constructed cable-stayed bridge
- cables are closely spaced in a modified fan configuration
- balanced cantilever erection; max. pick = 150 tons
- FHWA concerns about width addressed:
  - transversely prestressed deck (maintenance)
  - torsion of edge girders

DIST.	COUNTY	ROUTE	POST MILES (TOTAL PROJECT)	SHEET NO.	TOTAL SHEETS
04					

REGISTERED ENGINEER - CIVIL

PLANS APPROVAL DATE

The State of California or its officers or agents shall not be responsible for the accuracy or completeness of electronic copies of this plan sheet.

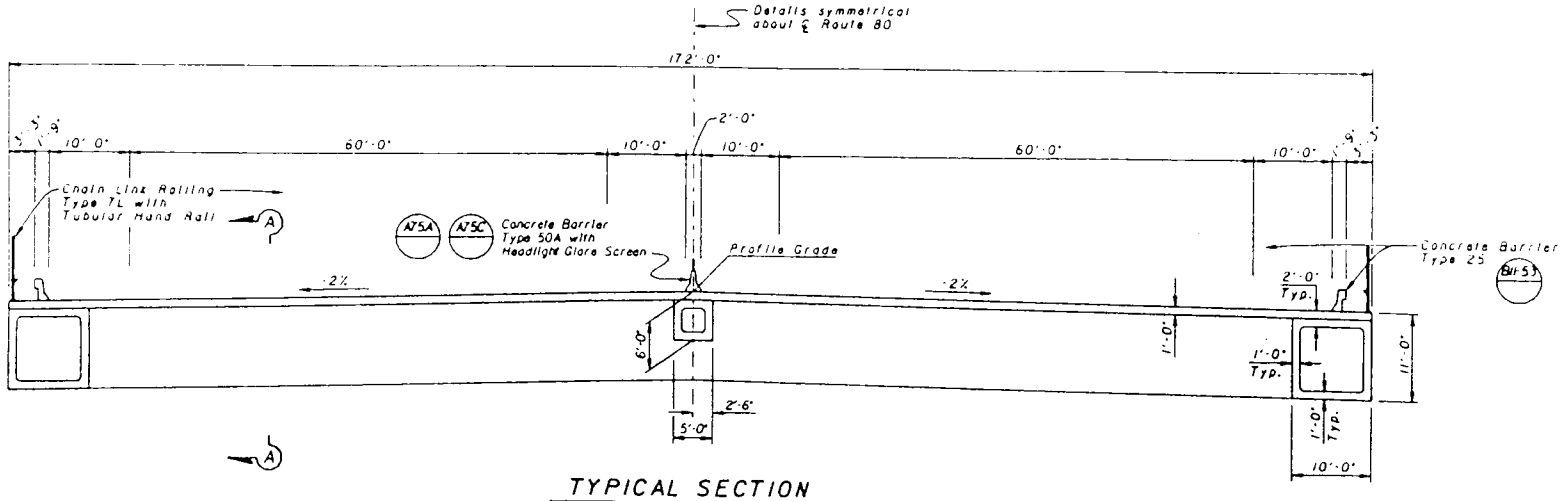

TYPICAL SECTION

1/8" = 1'-0"

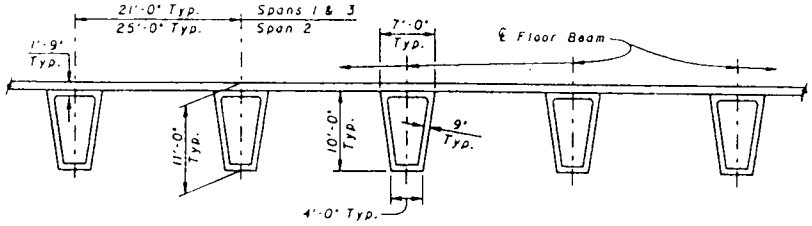

VIEW A-A

1/8" = 1'-0"

DESIGN	BY J. SUNDSTRUM 3-96	CHECKED J. MACINTYRE 3-96	STATE OF CALIFORNIA DEPARTMENT OF TRANSPORTATION	DIVISION OF STRUCTURES STRUCTURE DESIGN SA	BRIDGE NO. 33-0025
DETAILS	BY D.A. SANDERSON 3-96	CHECKED J. SUNDSTRUM 3-96			POST MILE 1.15
QUANTITIES	BY	CHECKED			

SFOBB REPLACEMENT - ALTERNATIVE 1

TYPICAL SECTION

ORIGINAL SCALE IN INCHES FOR REDUCED PLANS

CU 04
EA 01200K

DISREGARD PRINTS BEARING EARLIER REVISION DATES

USERNAME = J. SUNDSTRUM

SHEET 5

Towers; Alternatives 2 & 3

- four legged inverted Y
- spire & legs are tapered cellular steel sections
- T = 1.6 seconds (both longitudinal & transverse)

DIST.	COUNTY	ROUTE	POST MILES TOTAL PROJECT	SHEET NO.	TOTAL SHEETS
04					

REGISTERED ENGINEER - CIVIL

PLANS APPROVAL DATE

REGISTERED PROFESSIONAL ENGINEER — CIVIL — STATE OF CALIFORNIA

The State of California or its officers or agents shall not be responsible for the accuracy or completeness of electronic copies of this plan sheet

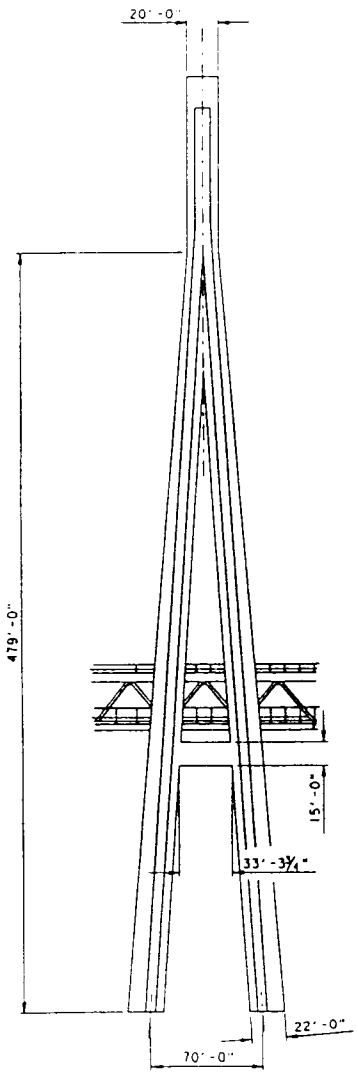

VIEW D-D

1" = 40'

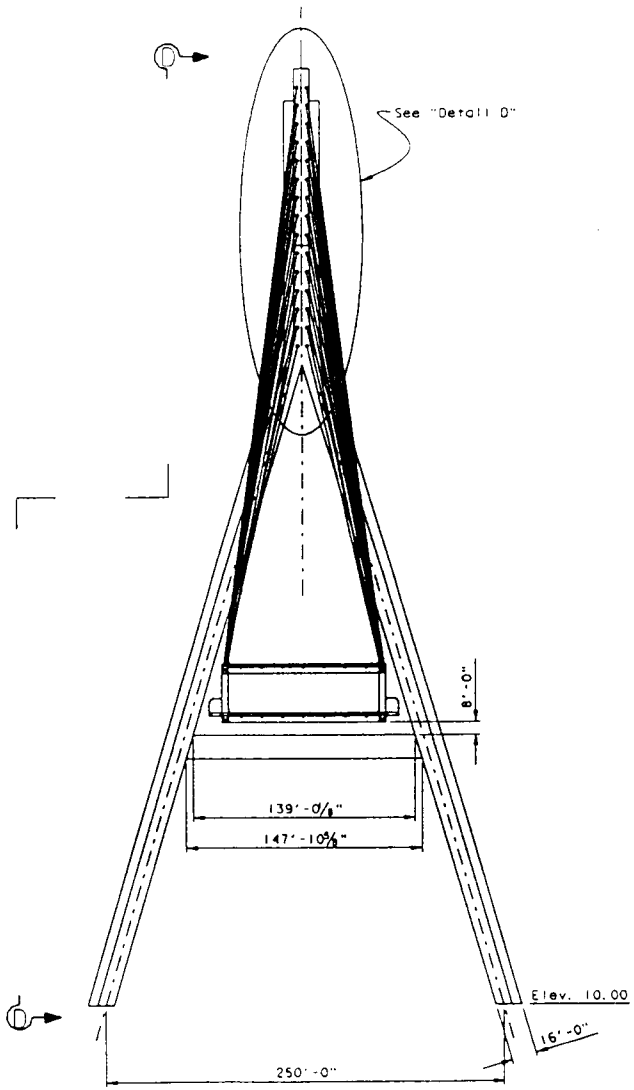

PIER E2 AND E3 - ELEVATION

1" = 40'

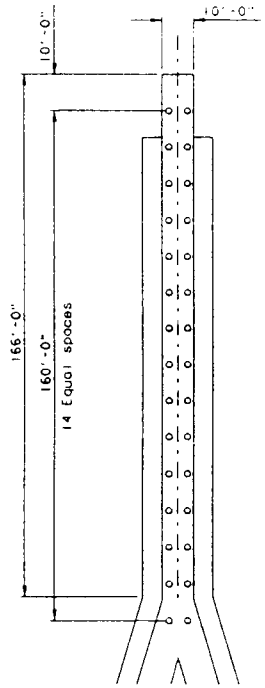

DETAIL D

1" = 20'

DESIGN	BY J. Lynch	CHECKED	
DETAILS	BY G. Wilford	CHECKED	
QUANTITIES	BY	CHECKED	

STATE OF CALIFORNIA
DEPARTMENT OF TRANSPORTATION

DIVISION OF STRUCTURES
STRUCTURE DESIGN SA

CU 04
EA 0434G1

BRIDGE NO. 33-0025
POST MILE 1.15

SFOBB REPLACEMENT-ALTERNATIVE 2

PIER E2 AND E3 DETAILS

ORIGINAL SCALE IN INCHES FOR REDUCED PLANS 0 1 2 3

ORIGINAL PRINTS BEARING EARLIER REVISION DATES

REVISION DATES (PRELIMINARY STAGE ONLY)

USERNAME => BUILDER

Superstructure; Alternatives 2 & 3

- 1600' main span, double deck warren truss cable-stayed bridge
- cables are closely spaced in a modified fan configuration
- modeled after the Yokohama Bay, Ohashi-Seto, and Higashi-Kobe Bridges
- deck is orthotropic steel with AC riding surface

DIST.	COUNTY	ROUTE	POST MILES TOTAL PROJECT	SHEET NO.	TOTAL SHEETS
04					

REGISTERED ENGINEER - CIVIL

PLANS APPROVAL DATE

REGISTERED PROFESSIONAL ENGINEER — CIVIL — STATE OF CALIFORNIA

The State of California or its officers or agents shall not be responsible for the accuracy or completeness of electronic copies of this plan sheet.

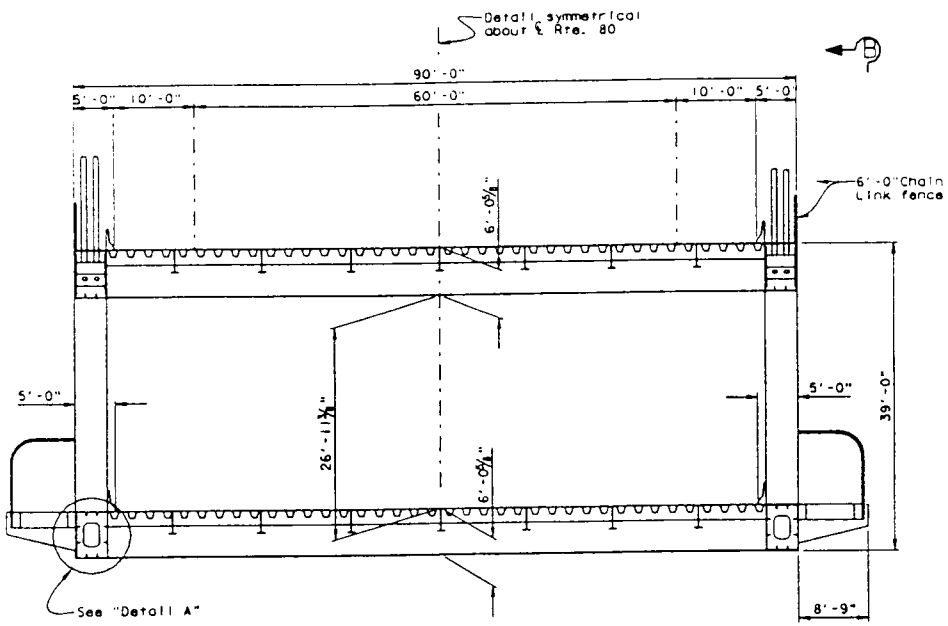

TYPICAL SECTION

1/8" = 1'-0"

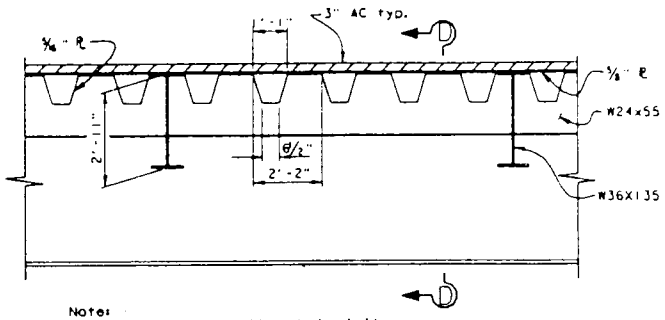

Note:
Upper deck shown, bottom deck similar

PART TYPICAL SECTION

1/2" = 1'-0"

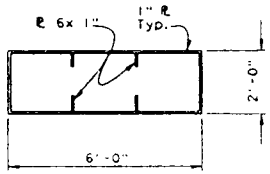

SECTION C-C

1/2" = 1'-0"

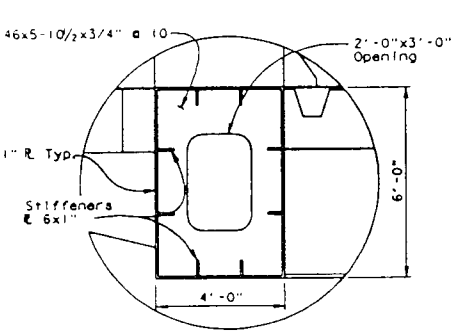

DETAIL A

1/2" = 1'-0"

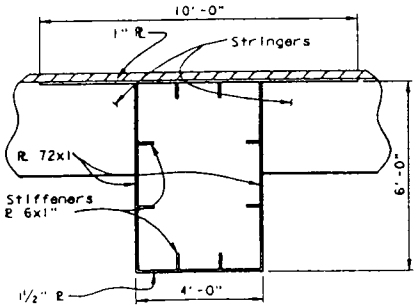

VIEW D-D
(FLOOR BEAM)

1/2" = 1'-0"

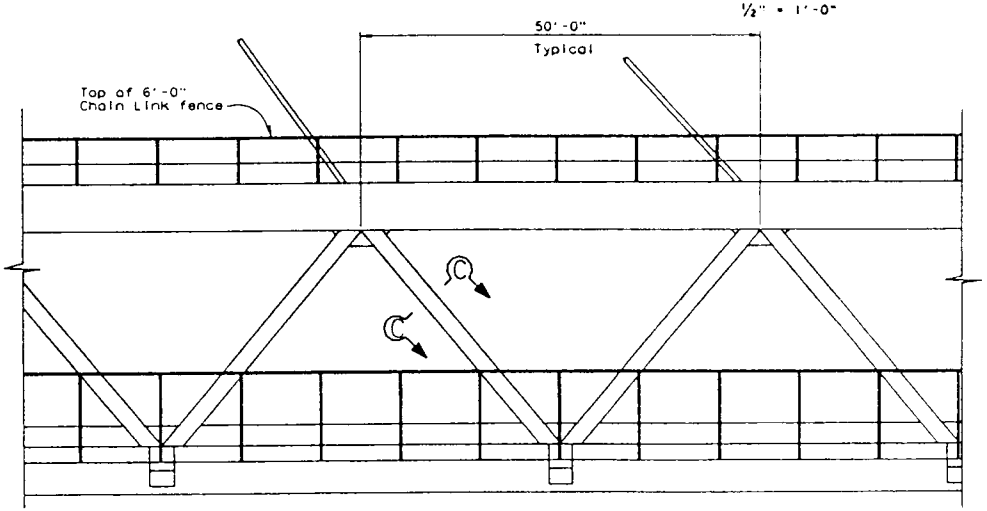

VIEW B-B
(TYPICAL TRUSS ELEVATION)

1/8" = 1'-0"

DESIGN	T. Cartner	CHECKED	
DETAILS	G. Stilford	CHECKED	
QUANTITIES		CHECKED	

STATE OF CALIFORNIA
DEPARTMENT OF TRANSPORTATION

DIVISION OF STRUCTURES
STRUCTURE DESIGN SA

CU 04
EA 0434G1

BRIDGE NO. 33-0025
POST MILE 1.5

SFOBB REPLACEMENT-ALTERNATIVE 3

TYPICAL SECTION

ORIGINAL SCALE IN INCHES FOR REDUCED PLANS 0 1 2 3

USERNAME = USER

Evolution of Alternatives

- DOUBLE TOWER CABLE-STAYED
  - alternative #1
- SINGLE TOWER CABLE-STAYED
  - alternative #1 with 1 main tower, lowered 40'
- SKYWAY
  - alternative #1 viaduct for entire length, lowered 40'

Box 2, Folder 3

Item 1

ACCNO_000021